ICC-ES Evaluation Report

ESR-3455

Reissued October 2024

Revised July 2026

This report remains under an active continuous compliance program through the end of October 2026.

This report also contains:

- **City of LA Supplement**
- **CA Supplement**
- **FL Supplement w/ HVHZ**

ICC-ES Evaluation Reports are not to be construed as representing aesthetics or any other attributes not specifically addressed, nor are they to be construed as an endorsement of the subject of the report or a recommendation for its use. There is no warranty by ICC Evaluation Service, LLC, express or implied, as to any finding or other matter in this report, or as to any product covered by the report.

Copyright © 2026 ICC Evaluation Service, LLC. All rights reserved.

DIVISION: 06 00 00—WOOD, PLASTICS AND COMPOSITES Section: 06 05 23—Wood, Plastic and Composite Fastenings	REPORT HOLDER: MITEK® INC.	EVALUATION SUBJECT: MITEK® ANGLES, STRAPS, HANGERS AND TIES FOR WOOD FRAMED CONSTRUCTION	

1.0 EVALUATION SCOPE

Compliance with the following codes:

- 2024, 2021, 2018, 2015 and 2012 *International Building Code®* (IBC)
- 2024, 2021, 2018, 2015 and 2012 *International Residential Code* (IRC)

Property evaluated:

- Structural

2.0 USES

The MiTek structural connectors described in this report (see Table 29 for a complete listing) are used to connect wood framing members in accordance with Section 2304.10.4 of the 2024 and 2021 IBC (Section 2304.10.3 of the 2018 and 2015 IBC and Section 2304.9.3 of the 2012 IBC). The connectors may also be used in structures regulated under the IRC when an engineered design is submitted to, and approved by, the code official, in accordance with Section R301.1.3 of the IRC.

3.0 DESCRIPTION

3.1 A3 Framing Angle:

The A3 framing angle is used to connect wood framing members. The framing angle is manufactured from No. 18 gage steel, and is prepunched for installation with 10d by $1^1/_2$-inch-long nails. See Table 1 and Figure 1 for product dimensions, fastener schedule, allowable loads, loading directions, and typical installation details.

3.2 AC Framing Angle:

The AC framing angle is used to connect wood framing members. The framing angle is manufactured from No. 16 gage steel, and is prepunched for installation with 10d or 16d common nails. See Table 2 and Figure 2 for product dimensions, nailing schedules, allowable loads, loading directions, and typical installation details.

3.3 B and BL Series Corner Braces:

The B and BL series corner braces are designed to provide reinforcement for 90-degree wood-to-wood connections. The B and BL corner braces are cold-formed from No. 12 gage steel and prepunched for installation with $^3/_8$ inch (9.5 mm) diameter bolts or 10d common nails, respectively. See Table 3 and Figure 3 for product dimensions, fastener schedule, allowable loads, and typical installation.

3.4 CMST Coil Strap:

The CMST coil strap is designed for resisting tension loads for a variety of wood framing applications. The CMST coil strap is cold-formed from either No. 12 or No. 14 gage steel, and is produced in lengths of 40 and $52^1/_2$ feet (12.2 and 16.0 m), respectively. The CMST coil strap is prepunched for installation with either 10d common or 16d common nails. See Table 4 and Figure 4 for product dimensions, fastener schedule, allowable loads, and a typical installation detail.

3.5 CMSTC and MSTC Strap Ties:

The CMSTC and MSTC strap ties are designed to connect wood framing members to resist tension forces when attached to multiple 2-by members. The strap ties are cold-formed from No. 14 or No. 16 gage steel, and are prepunched for installation with 10d or 16d common nails. See Table 5 and Figure 5 for product dimensions, fastener schedule, allowable loads, and a typical installation detail.

3.6 CSH-TZ Concealed Stringer Hanger:

The CSH-TZ Concealed Stringer Hanger provides concealed connection for attaching a stair stringer to a rim joist or other header. The seat of the hanger is adjustable to match the slope of the stair stringer. The reversible design allows the connector to be used on the left or right side of the stair stringer, with the tabs positioned towards the inside of the stringer. The CSH-TZ is cold-formed from No. 18 gage steel and is prepunched for installation with 10d-by-$1^1/_2$-inch-long nails into the header and joist, along with diamond shaped holes in each flange allowing for temporary attachment with woodscrews to aid in installation of the connector. Embossed instructions on each flange guides the installer in proper placement and fastener installation. See Table 6 and Figure 6 for product dimensions, fastener schedule, allowable loads, and a typical installation detail.

3.7 FWAN Foundation Wall Anchor:

The FWAN foundation wall anchor is designed to transfer lateral loads between the rim board and the sill plate. It is installed centered on the joist/blocking or offset within 4 inches of the joist/blocking, as shown in Figure 7. The FWAN foundation wall anchor is cold-formed from No. 16 gage steel and prepunched for installation with 10d common nails. See Tables 7a and 7b and Figure 7 for product dimensions, fastener schedule, allowable loads, and typical installation details.

3.8 HH Header Hanger:

The HH header hanger is designed to support wood headers over door or window openings. The HH header hanger is cold-formed from No. 16 gage steel, and is prepunched for installation with 16d common nails. See Table 8 and Figure 8 for product dimensions, fastener schedule, allowable loads, and a typical installation detail.

3.9 HTW, MTW and LTW Twist Strap Ties:

HTW, MTW and LTW twist straps tie framing members to resist tension forces, and are typically used for connecting roof trusses to wall top plates, or wall studs to sill plates and rim joists. The HTW twist strap tie is manufactured from No. 14 gage steel. The MTW twist strap tie is manufactured from No. 16 gage steel. The LTW twist strap tie is manufactured from No. 18 gage steel. The twist strap ties are prepunched for installation with 10d common and 10d by $1^1/_2$-inch-long nails. See Table 9 and Figure 9 for product dimensions, fastener schedule, allowable loads, and typical installation details.

3.10 JA Joist Angle:

The JA joist angle is designed to support wood joists where stirrup-style hangers cannot be installed, or for reinforcement of 90-degree wood connections. The angle is cold-formed from either No. 14 gage or No. 16 gage steel, and is prepunched for installation with either 16d common or 10d by $1^1/_2$-inch-long nails. See Table 10 and Figure 10 for product dimensions, fastener schedule, allowable loads, and typical installation details.

3.11 KSA and KHSA Connector Straps:

The KSA and KHSA connector straps are designed to transfer tension loads between two opposing purlins or joists across the supporting beam. The KSA connector strap is cold-formed from No. 12 gage steel plate, and is prepunched for installation with either 16d common nails, or $^1/_2$-inch (12.7 mm) bolts. The KHSA connector strap is cold-formed from No. 3 gage hot-rolled steel plate, and is prepunched for installation with $^3/_4$-inch-diameter (19 mm) bolts. See Table 11 and Figure 11 for product dimensions, fastener schedule, allowable loads, and typical installation details.

3.12 KHST Strap Tie:

The KHST strap tie is designed to connect various wood framing members together to resist tensile forces. The KHST strap tie is fastened to wood framing members with bolts. The KHST strap tie is fabricated from minimum No. 3 or No. 7 gage hot-rolled steel plate, and is prepunched for installation with either $^5/_8$-inch-

diameter (15.9 mm) or $^3/_4$-inch-diameter (19.0 mm) bolts. See Table 12 and Figure 12 for product dimensions, fastener schedule, and allowable loads.

3.13 KRPS Series Strap Ties:

The KRPS series strap ties are designed to reinforce notched wood members at the notched locations. The KRPS series strap ties are cold-formed from No. 16 gage steel and prepunched for installation of 16d common nails. See Table 13 and Figure 13 for product dimensions, fastener schedule, allowable loads, and typical installation details.

3.14 KST, KSTI and LSTI Strap Ties:

The KST, KSTI and LSTI strap ties are designed to connect various wood framing members together to resist tensile forces. The KST strap tie is cold-formed from No. 10 gage, No. 12 gage, No. 14 gage, No. 16 gage or No. 20 gage steel, and is prepunched for either 16d common nails or $^1/_2$-inch-diameter (12.7 mm) bolts. The KSTI strap tie is cold-formed from No. 12 gage steel, and is prepunched for installation with 10d-by-$1^1/_2$ inch nails. The LSTI strap tie is cold-formed from No. 18 gage steel, and is prepunched for installation with 10d by $1^1/_2$-inch-long nails. See Table 14 and Figure 14 for product dimensions, fastener schedules, and allowable loads.

3.15 KVB and KVBI Knee Braces:

The KVB and KVBI knee braces are designed to provide lateral support of the bottom of deep beams by attaching to purlins installed on each side of the beam. The KVB and KVBI knee braces are cold-formed from No. 12 gage steel and are prepunched for installation with either MiTek Pro Series WS3 wood screws (ESR-2761) or 10d common nails. See Table 15 and Figure 15 for product dimensions, fastener schedule, allowable loads, and a typical installation detail.

3.16 LFTA6 Strap Tie:

The LFTA6 strap tie is used to connect roof trusses to wall top plates or wall studs to sill plates and rim joists. The LFTA6 strap tie is manufactured from No. 16 gage steel, and is prepunched for installation with 8d common and 8d by $1^1/_2$-inch-long nails. See Table 16 and Figure 16 for product dimensions, fastener schedule, allowable loads, and typical installation details.

3.17 LSTA and MSTA Strap Ties:

The LSTA and MSTA strap ties are designed to transfer tension loads between wood members. The LSTA strap tie is cold-formed from either No. 18 gage or No. 20 gage steel. The MSTA strap tie is cold-formed from either No. 16 gage or No. 18 gage steel. LSTA and MSTA strap ties are prepunched for installation with 10d common nails. See Table 17 and Figure 17 for product dimensions, fastener schedule, and allowable loads.

3.18 ML Angles: The ML angles are designed to connect various wood framing members together. The ML angles are cold-formed from No. 12 gage steel and prepunched for installation of WS15 wood screws (ESR-2761). See Table 18 and Figure 18 for product dimensions, fastener schedule, allowable loads, and typical installation details.

3.19 MP Framing Angle:

The MP framing angle is manufactured at an angle of 100 degrees and is designed to allow a one-time field adjustment, for framing members connected with an angle ranging from 45 to 180 degrees (flat). The MP framing angle is cold-formed from No. 18 gage steel, and is prepunched for installation with either 10d common or 10d by $1^1/_2$-inch-long nails. See Table 19 and Figure 19 for product dimensions, fastener schedules, allowable loads, and typical installation details.

3.20 MP Multi-Purpose Framing Angle:

The MP Multi-Purpose framing angle is designed to provide connections for two-way and three-way framing members connected at various angles and configurations. The MP Multi-Purpose framing angle is cold-formed from No. 18 gage steel, and is prepunched for installation with 8d by $1^1/_2$-inch-long nails. See Table 20 and Figure 20 for product dimensions, fastener schedule, allowable loads, and a typical installation detail.

3.21 MP_F Multi-Lateral Plate Tie:

The MP_F Multi-Lateral plate tie is designed to transfer lateral loads between the top plate of double plates and the rim joist or rim blocking. The MP_F Multi-Lateral plate tie is cold-formed from No. 20 gage steel, and is prepunched for installation with either 8d common or 8d by $1^1/_2$-inch-long nails. See Table 21 and Figure 21 for product dimensions, fastener schedule, allowable loads, and a typical installation detail.

3.22 RBC Roof Boundary Clips:

The RBC Roof Boundary Clip is designed to connect roof blocking to a wall top plate for a lumber connection having an angle ranging from 0 to 45 degrees. The RBC is shipped flat and bent to the correct angle in the field. The RBC Roof Boundary Clip is cold-formed from No. 20 gage steel and is prepunched for 10d-by-

1½-inch nails into the top plate and 10d-by-1½-inch nails into the blocking. See Table 22 and Figure 22 for for product dimensions, fastener schedule, allowable loads, and typical installation details.

3.23 RS Coiled Strap:

The RS coiled strap is designed to connect various wood framing members together to resist tensile forces. The strap is cold-formed from No. 14 gage, No. 16 gage, No. 18 gage, No. 20 gage or No. 22 gage steel, and is available in cartons containing coils having lengths of 25 feet (7.62 m) or greater. RS coiled strapping is prepunched for installation with either 8d common or 10d common nails. See Table 23 and Figure 23 for product dimensions, required length per specific gravity of wood member, fastener schedules, allowable loads, and a typical installation detail.

3.24 RSPT Stud Plate Tie:

The RSPT stud plate tie is designed to connect wall studs to single- or double-top plates or sill plates of walls. The RSPT stud plate tie is cold-formed from either No. 18 gage or No. 20 gage steel, and is prepunched for installation with 10d by $1^1/_2$-inch-long or 8d by $1^1/_2$-inch-long nails. See Table 24 and Figure 24 for product dimensions, fastener schedule, allowable loads, and typical installation details.

3.25 SPT Stud-Plate Tie:

The SPT stud-plate tie is designed to fasten single and double plates to studs of walls. The SPT 44 stud-plate tie is designed to accommodate connections of double or triple studs to the plate, while the SPT 22 and SPT 24 are designed for connecting a single stud to plates. The SPT stud-plate ties are cold-formed from No. 20 gage steel. The SPT 22 and SPT 24 stud plates are prepunched for installation with 10d common nails and the SPT 44 stud plates are prepunched for installation with 16d common nails. Nails installed into to the wide face of the stud must be driven at 30 degrees from the perpendicular to the stud on the horizontal plane. See Table 25 and Figure 25 for product dimensions, fastener schedule, allowable loads, and a typical installation detail.

3.26 SPT, SPTH and SPTHW Stud Plate Ties:

The SPT, SPTH and SPTHW stud plate ties are designed to connect wall studs to single- or double-top plates of walls. The SPT and SPTH stud plate ties are cold-formed from No. 18 gage and No. 20 gage steel, respectively, and are prepunched for installation with 10d by $1^1/_2$-inch-long nails. See Table 26 and Figure 26 for product dimensions, fastener schedule, allowable loads, and a typical installation detail.

3.27 SRC/SRCP Sill Retrofit Connectors:

The SRC and SRCP sill retrofit connectors are designed to transfer lateral loads between the sill and the foundation. The SRC consists of a c-shaped channel and a flat plate. The SRCP is a single flat plate. The c-shaped channel is cold-formed from No. 12 gage steel and prepunched for installation of MiTek Pro Series WS6 wood screws (ESR-2761). The flat plate is fabricated from No. 10 gage steel and prepunched for installation of WS6 wood screws and $^1/_2$-inch-diameter DeWalt Power-Stud+ SD2 (ESR-2502) carbon steel anchors. See Table 27 and Figure 27 for product dimensions, fastener schedule, allowable loads, and typical installation details.

3.28 ST Strap Tie:

The ST strap tie is used for various framing applications to resist tension loads between connected wood members. The ST strap tie is cold-formed from No. 16 gage steel, and is prepunched for installation with 16d common nails. See Table 28 and Figure 28 for product dimensions, fastener schedules and allowable loads.

3.29 Materials:

3.29.1 Steel: The specific types of steel and corrosion protection for each product are described in Table 29 of this report. The minimum base-steel thicknesses for the different steel gages are shown in the following table:

GAGE NO.	MINIMUM BASE-STEEL THICKNESS (in.)
22	0.029
20	0.033
18	0.044
16	0.055
14	0.070
12	0.099
10	0.129
7	0.171
3	0.240

For **SI:** 1 inch = 25.4 mm.

3.29.2 Wood: Wood members with which the MiTek structural connectors are used must be dimension sawn lumber with a minimum specific gravity of 0.50, or approved structural composite lumber (SCL) with a minimum equivalent specific gravity of 0.50, unless otherwise noted in the applicable table within this report. Wood members must have a moisture content not exceeding 19 percent (16 percent for SCL), except as noted in Section 4.1. Beams, headers, rim joists and other framing members to which the connectors are attached must have an actual dimension of 1.5 inches (38 mm) or greater in the direction parallel to the longitudinal axis of the nail or bolt.

3.29.3 Fasteners: Required faster types and sizes for use with MiTek connectors described in this evaluation report are specified in Sections 3.29.3.1 and 3.29.3.2 and Tables 1 through 28.

3.29.3.1 Nails: Nails used for connectors described in this report must be bright or hot-dipped galvanized carbon steel nails complying with material requirements, physical properties, tolerances, workmanship, protective coating and finishes, and packaging requirements specified in ASTM F1667; and must have lengths, diameters and bending yield strengths, F_{yb}, as shown in the following table:

NAIL DESIGNATION	DIAMETER (inch)	LENGTH (inches)	MINIMUM REQUIRED F_{yb} (psi)
8d x $1^1/_2$	0.131	1.5	100,000
8d Common	0.131	2.5	100,000
10d x $1^1/_2$	0.148	1.5	90,000
10d Common	0.148	3.0	90,000
16d Common	0.162	3.5	90,000

For **SI:** 1 inch = 25.4 mm; 1 psi = 6,895 Pa.

Alternatively, nails of other materials or finishes may be used when they are recognized in an ICC-ES evaluation report as having bending yield strength and withdrawal capacity equal to or better than those of a bright carbon steel nails of the same nominal diameter.

3.29.3.2 Bolts: At a minimum, bolts must conform to ASTM A307, Grade A, and must have a minimum bending yield strength, F_{yb}, of 45,000 psi (310 MPa). Required bolt diameters are specified, in inches, within the applicable sections and tables of this evaluation report.

3.29.4 Use in Treated Wood: Connectors and fasteners used in contact with preservative-treated or fire-retardant-treated wood must comply with 2024 and 2021 IBC Section 2304.10.6 (2018 and 2015 IBC Section 2304.10.5 and 2012 IBC Section 2304.9.5) and Section 304.3 of the 2024 IRC (Section R317.3 of the 2021, 2018, 2015 and 2012 IRC). The lumber treater or the report holder (MiTek), or both, should be contacted for recommendations on the appropriated level of corrosion resistance specified for the connectors and fasteners and the connection capacities of fasteners and connectors used with the specific proprietary preservative-treated or fire-retardant-treated wood.

4.0 DESIGN AND INSTALLATION

4.1 Design:

The allowable loads given in Tables 1 through 28 are based on allowable stress design. The use of the tabulated allowable loads for the products listed in this report must comply with all applicable requirements and conditions specified in this evaluation report. The tabulated allowable loads are for normal load duration and/or short load duration, or both, based on load duration factors, C_D, in accordance with Section 11.3.2 of the 2024, 2018 and 2015 *National Design Specification® for Wood Construction* (NDS) (Section 10.3.2 of the 2012 NDS for the 2012 IBC and IRC). No further increases are permitted for load durations other than those specified. The tabulated allowable loads are for connections in wood used under continuously dry conditions where the maximum moisture content in wood is 19 percent or less (16 percent or less for SCL) and sustained temperatures are limited to 100°F (37.8°C) or less. When connectors are installed in wood having a moisture content greater than 19 percent (16 percent for engineered wood products), or where the in-service moisture content in wood is expected to exceed this value, the applicable wet service factor, C_M, for dowel-type fasteners as specified in the NDS, must be applied, unless otherwise noted in the tables of this report. When connectors are installed in wood that will experience sustained exposure to temperatures exceeding 100°F (37.8°C), the allowable loads in this evaluation report must be adjusted by the temperature factor, C_t, specified in Section 11.3.4 of the 2024, 2018 and 2015 NDS (10.3.4 of the 2012 NDS). The group action factor, C_g, has been accounted for, in accordance with the NDS, in the tabulated allowable loads, where applicable. For connectors installed with bolts, the minimum edge distances and end distances within the wood members must be met, such that the geometry factor, C_Δ, is 1.0, in accordance with the 2024, 2018 and 2015 NDS Section 12.5.1 (Section 11.5.1 of the 2012 NDS) unless otherwise noted in this report. Connected wood members must be

checked for load-carrying capacity at the connection in accordance with the 2024, 2018 and 2015 NDS Section 11.1.2 (Section 10.1.2 of the 2012 NDS).

4.2 Installation:

Installation of the MiTek connectors must be in accordance with this evaluation report and the manufacturer's published installation instructions. Mechanical fasteners must be installed in wood members in accordance with the 2024, 2018 and 2015 NDS Section 12.1 (Section 11.1 for the 2012 NDS). See Figures 1 through 28 for installation details.

4.3 Special Inspection:

4.3.1 Main Wind-Force-Resisting Systems under the IBC: Periodic special inspection must be conducted for components within the main wind-force-resisting system, where required in accordance with 2024 and 2021 IBC Sections 1704.2 and 1705.12 (2018 and 2015 IBC Sections 1704.2 and 1705.11 and 2012 IBC Section 1704), as applicable.

4.3.2 Seismic-Force-Resisting Systems under the IBC: Periodic special inspection must be conducted for components within the seismic force-resisting system, where required in accordance with the 2024 and 2021 IBC Sections 1704.2 and 1705.13 (2018 and 2015 IBC Sections 1704.2 and 1705.12 and Sections 1704.2 and 1705.11 of the 2012 IBC), as applicable.

4.3.3 Installations under the IRC: Special inspections are normally not required for connectors used in structures regulated under the IRC. However, for components and systems requiring an engineered design in accordance with IRC Section R301, periodic special inspection requirements and exemptions must be in accordance with Sections 4.3.1 and 4.3.2 of this report.

5.0 CONDITIONS OF USE:

The MiTek connectors described in this report comply with, or are suitable alternatives to what is specified in, those codes listed in Section 1.0 of this report, subject to the following conditions:

5.1 The connectors must be manufactured, identified, designed and installed in accordance with this report and the manufacturer's published instructions. A copy of the manufacturer's published installation instructions must be available at the jobsite at all times during installation. In the event of a conflict between this report and the manufacturer's published installation instructions, this report governs.

5.2 Calculations showing compliance with this report must be submitted to the code official. The calculations must be prepared by a registered design professional where required by the statutes of the jurisdiction in which the project is to be constructed.

5.3 Connected wood members and fasteners used must comply with Section 3.29.2 and 3.29.3, respectively.

5.4 Adjustment factors, noted in Section 4.1 of this report and the applicable codes, must be considered where applicable.

5.5 Use of connectors and fasteners with preservative-treated or fire-retardant-treated lumber must be in accordance with Section 3.29.4.

5.6 Structural members to which the connectors are attached must be checked for load-carrying capacity at connections in accordance with the NDS.

5.7 The connectors are manufactured under an approved quality control program with inspections by ICC-ES.

6.0 EVIDENCE SUBMITTED

Data in accordance with the ICC-ES Acceptance Criteria for Joist Hangers and Similar Devices (AC13), dated October 2018 (editorially revised February 2024).

7.0 IDENTIFICATION

7.1 The connectors described in this evaluation report are identified by the product model (stock) number, the number of the ICC-ES index evaluation report for MiTek (ESR-2685), and by one or more of the following designations: MiTek, USP, or USP Structural Connectors.

7.2 The report holder's contact information is the following:

MITEK® INC.
16023 SWINGLEY RIDGE ROAD
CHESTERFIELD, MISSOURI 63017
(800) 328-5934
www.mitek-us.com
uspcustomerservice@mii.com

TABLE 1—NAILING SCHEDULES, DIMENSIONS AND ALLOWABLE LOADS FOR A3 FRAMING ANGLES[5]

STOCK NUMBER	STEEL GAGE	DIMENSIONS (inches)			FASTENER SCHEDULE[4]				LOAD[6] DIR.	ALLOWABLE LOADS[1,2,3] (lbs.)			
					Header		Joist						
		W1	W2	L	Qty	Type	Qty	Type		C_D = 1.0	C_D = 1.15	C_D = 1.25	C_D = 1.6
A3	18	$1^7/_{16}$	$1^7/_{16}$	$2^3/_4$	4	10d x $1^1/_2$	4	10d x $1^1/_2$	F_1	480	545	590	740
									F_2	480	545	590	605
									F_3	375	375	375	375

For **SI:** 1 inch = 25.4 mm, 1 lb = 4.45 N.

[1]Allowable loads shown are for a single angle. When angles are installed on both faces of the joist, the angles must be offset so that the nails from opposing sides do not interfere.

[2]Allowable loads have been adjusted for load duration factors, C_D, as shown, in accordance with the NDS. The allowable loads do not apply to loads of other durations, and are not permitted to be adjusted for other load durations. See Sections 4.1 and 4.2 for additional design and installation requirements.

[3]Allowable loads shown are for installations in sawn lumber or structural composite lumber complying with Section 3.29.2.

[4]See Section 3.29.3 for required fastener dimensions and mechanical properties.

[5]If a single angle is installed on each end of a supported member, the angles must be installed on opposite sides of the supported member, or wood blocking must be installed to prevent rotation.

[6]F_1 is the vertical download, F_2 is the lateral load towards angle, and F_3 is the lateral load away from angle.

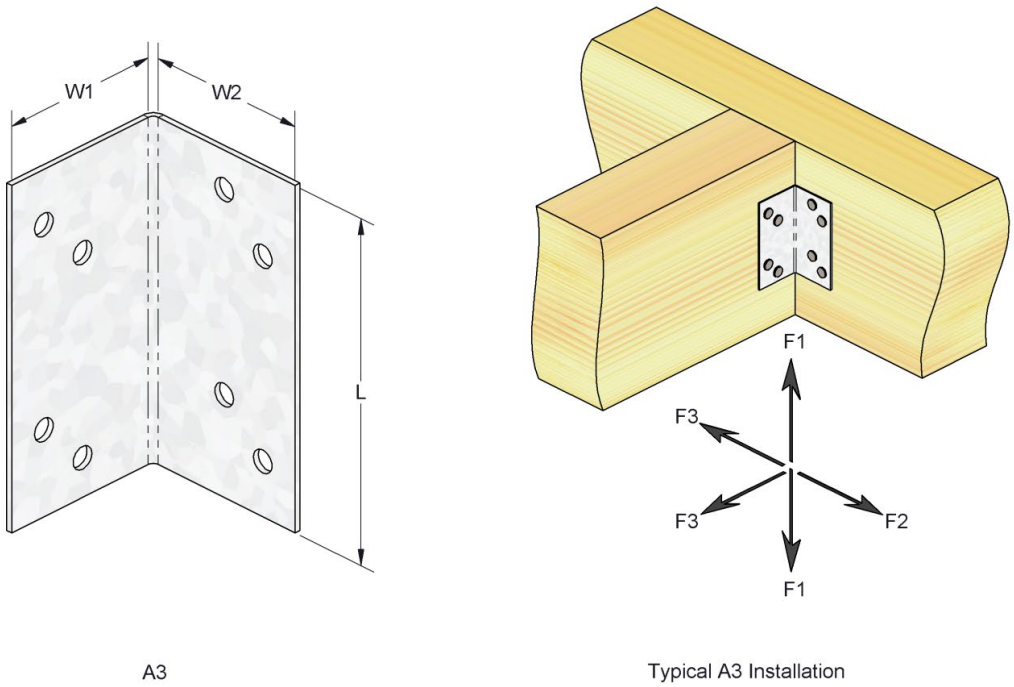

FIGURE 1—DIMENSIONS AND INSTALLATION OF A3 FRAMING ANGLE

TABLE 2—NAILING SCHEDULES, DIMENSIONS AND ALLOWABLE LOADS FOR AC FRAMING ANGLES[1,2,3,4,5,6]

STOCK NUMBER	STEEL GAGE	DIMENSIONS (inches)			FASTENER SCHEDULE				LOAD[7] DIR.	ALLOWABLE LOADS (lbs.)			
					Header		Joist						
		W1	W2	L	Qty	Type	Qty	Type		C_D = 1.0	C_D = 1.15	C_D = 1.25	C_D = 1.6
AC5	16	$1^5/_{16}$	$2^3/_8$	$4^7/_8$	3	10d Common	3	10d Common	F_1	375	420	455	565
									F_2	375	420	455	565
									F_3	155	180	195	250
					3	16d Common	3	16d Common	F_1	440	500	540	670
									F_2	440	500	540	595
									F_3	175	205	220	280
AC7	16	$1^5/_{16}$	$2^3/_8$	$6^{15}/_{16}$	4	10d Common	4	10d Common	F_1	500	560	605	755
									F_2	500	560	605	755
									F_3	210	240	260	335
					4	16d Common	4	16d Common	F_1	590	665	720	895
									F_2	590	665	720	895
									F_3	235	270	295	375
AC9	16	$1^5/_{16}$	$2^3/_8$	$8^7/_8$	5	10d Common	5	10d Common	F_1	625	700	755	945
									F_2	625	700	755	900
									F_3	260	300	325	415
					5	16d Common	5	16d Common	F_1	735	835	900	1,120
									F_2	735	835	900	900
									F_3	295	340	370	470

For **S1:** 1 inch = 25.4 mm, 1 lb = 4.45 N.

[1]Allowable loads shown are for a single angle.
[2]Allowable loads have been adjusted for load duration factors, C_D, as shown, in accordance with the NDS. The allowable loads do not apply to loads of other durations, and are not permitted to be adjusted for other load durations. See Section 4.1 and Section 4.2 for additional design requirements and installation details.
[3]Allowable loads shown are for installations in sawn lumber or structural composite lumber complying with Section 3.29.2.
[4]See Section 3.29.3 for required fastener dimensions and mechanical properties.
[5]If a single angle is installed on each end of a supported member, the angles must be installed on opposite sides of the supported member, or wood blocking must be installed to prevent rotation.
[6]Allowable loads in the F_3 load direction are for installations in 2-by nominal dimension lumber having a minimum dimension of 1.5 inches (38 mm) in the direction parallel to the longitudinal axis of the nails. For installations in 4-by nominal dimension lumber having a minimum dimension of 3.5 inches (89 mm) in the direction parallel to the longitudinal axis of the nails, allowable loads in the F_3 load direction may be increased by the following factors:
For 10d common nails: 1.94
For 16d common nails: 1.68
[7]F_1 is the vertical download, F_2 is the lateral load towards angle, and F_3 is the lateral load away from angle or is the tension load away from the header.

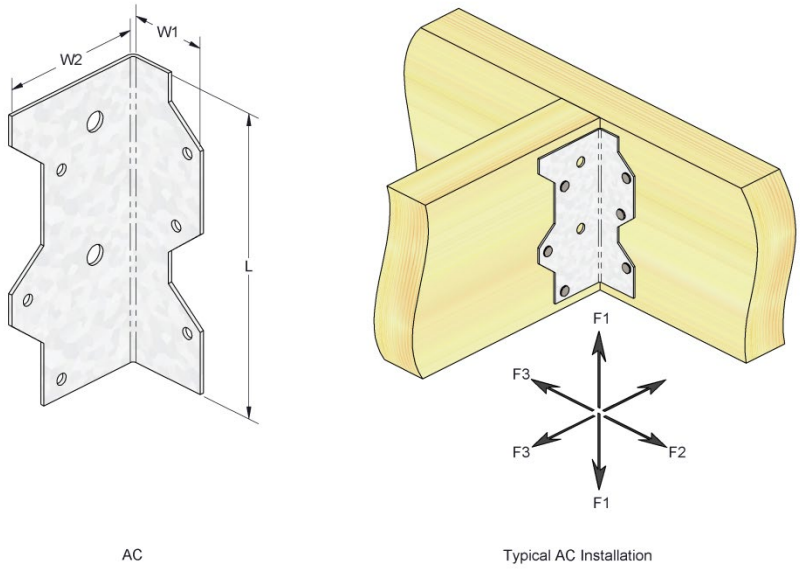

FIGURE 2—DIMENSIONS AND INSTALLATION OF AC FRAMING ANGLE

TABLE 3—NAILING SCHEDULES, DIMENSIONS AND ALLOWABLE LOADS FOR B AND BL SERIES CORNER BRACES[1,2]

STOCK NUMBER	DIMENSIONS (inch)		FASTENER SCHEDULE[3]				ALLOWABLE LOADS (lbf)	
			Nails		Bolts		F_1[4]	F_2
	W	L	Qty	Type	Qty	Type	$C_D = 1.6$	$C_D = 1.6$
B66	$1^1/_2$	6	--	--	4	3/8	710	335
B88	2	8	--	--	6	3/8	620	305
BL3	$1^1/_4$	$3^1/_{16}$	8	10d Com.	--	--	735	285
BL4	$1^1/_4$	$4^{13}/_{16}$	10	10d Com.	--	--	720	275

For SI: 1 inch = 25.4 mm, 1 lbf = 4.45 N, 1 psi = 6.98 kPa

[1]Allowable loads have been adjusted for load duration factors, C_D, as shown, in accordance with the NDS. The allowable loads do not apply to loads of other durations, and are not permitted to be adjusted for other load durations. See Sections 4.1 and 4.2 for additional design and installation requirements.

[2]Allowable loads shown are for installations in wood members complying with Section 3.29.2. Minimum member thickness is 3 inches.

[3]See Section 3.29.3 for required fastener dimensions and mechanical properties.

[4]Loads shown are for a single corner brace. Corner braces are required on both sides of the connection to achieve F_1 loads in both directions.

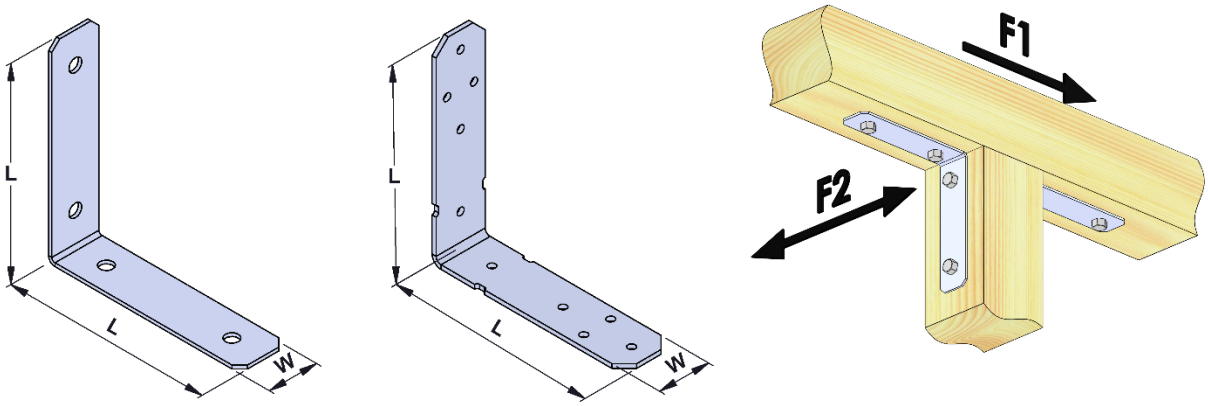

B66 Corner Brace (B88 Similar)

BL4 Corner Brace (BL3 Similar)

Typical B66 Installation (B88, BL3, BL4 Similar)

FIGURE 3—DIMENSIONS AND INSTALLATION OF CORNER BRACE

TABLE 4—CMST COIL STRAP ALLOWABLE LOADS[1,2,3,4]

STOCK NO.	STEEL GAGE	DIMENSIONS		RIM JOIST INSTALLATION		FASTENER SCHEDULE			ALLOWABLE TENSION (lbs)
		Width (in.)	Coil Length (feet)	Cut Length	End Length	Min. Qty.	Type	Nail Spacing (O.C.)	C_D = 1.6
Installed in wood with a specific gravity of 0.50 or greater									
CMST12	12	3	40	Clear Span + 74"	37"	82	16d Common	$1^3/_4$"	9,320
				Clear Span + 168"	84"	96	10d Common	$3^1/_2$"	
				Clear Span + 332"	166"			7"	
CMST14	14	3	$52^1/_2$	Clear Span + 58"	29"	64	16d Common	$1^3/_4$"	6,630
				Clear Span + 130"	65"	74	10d Common	$3^1/_2$"	
				Clear Span + 256"	128"			7"	
Installed in wood with a specific gravity from 0.42 to 0.49									
CMST12	12	3	40	Clear Span + 90"	45"	102	16d Common	$1^3/_4$"	9,320
				Clear Span + 206"	103"	118	10d Common	$3^1/_2$"	
				Clear Span + 410"	205"			7"	
CMST14	14	3	$52^1/_2$	Clear Span + 72"	36"	80	16d Common	$1^3/_4$"	6,630
				Clear Span + 164"	82"	94	10d Common	$3^1/_2$"	
				Clear Span + 326"	163"			7"	

For **SI:** 1 inch = 25.4 mm, 1 lb = 4.45 N.

[1]Allowable loads have been adjusted for a load duration factor, C_D, of 1.6, corresponding to a ten-minute load duration (i.e., wind or earthquake loading), in accordance with the NDS. The allowable loads do not apply to loads of other durations, and are not permitted to be adjusted for other load durations. See Sections 4.1 and 4.2 for additional design and installation requirements.

[2]Allowable loads shown are for installations in wood members complying with Section 3.29.2 except that the CMST coil strap may be attached to wood members having a specific gravity from 0.42 to 0.49, as shown.

[3]See Section 3.29.3 for required fastener dimensions and mechanical properties.

[4]The minimum fastener quantity indicated is the minimum number fasteners required at each end of the connection. Products may have additional holes not needed to meet the allowable tension load of the strap.

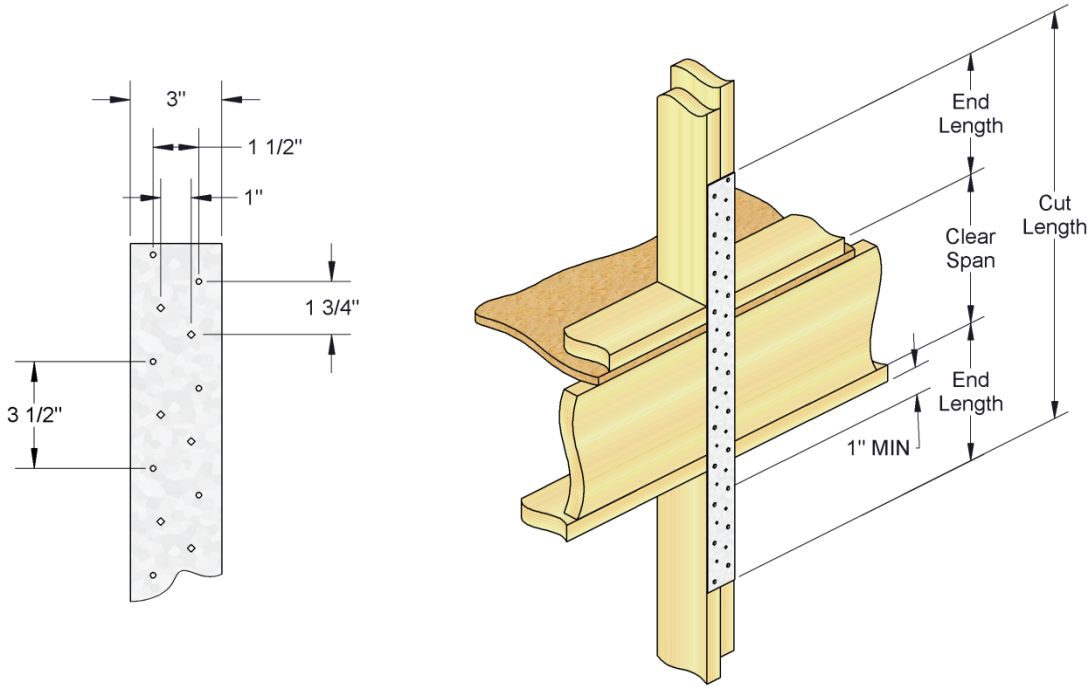

Typical CMST Fastener Hole Spacing

Typical CMST Rim Joist Installation

FIGURE 4—CMST COIL STRAP

TABLE 5—MSTC AND CMSTC STRAP TIE ALLOWABLE LOADS [1,2,3]

STOCK NO.	STEEL GAGE	DIMENSIONS (in.)		FASTENERS		ALLOWABLE TENSION LOADS (lbs)
		W	L	Minimum Nails Per End	Type	C_D = 1.6
MSTC28	16	3	$28^1/_4$	18	10d Common	3,455
	16	3	$28^1/_4$	17	16d Common	3,860
MSTC40	16	3	$40^1/_4$	26	10d Common	4,715
	16	3	$40^1/_4$	23	16d Common	4,715
MSTC52	16	3	$52^1/_4$	30	10d Common	4,715
	16	3	$52^1/_4$	26	16d Common	4,715
MSTC66	14	3	$65^3/_4$	36	10d Common	6,015
	14	3	$65^3/_4$	31	16d Common	6,015
MSTC78	14	3	$77^3/_4$	38	10d Common	6,015
	14	3	$77^3/_4$	33	16d Common	6,015
CMSTC16[4]	16	3	--	30	10d Common	4,715
	16	3	--	25	16d Common	4,715

For **SI:** 1 inch = 25.4 mm, 1 lb = 4.45 N.

[1]Allowable loads have been adjusted for a load duration factor, C_D, of 1.6, corresponding to a ten minute load duration (i.e., wind or earthquake loading), in accordance with the NDS. The allowable loads do not apply to loads of other durations, and are not permitted to be adjusted for other load durations. See Sections 4.1 and 4.2 for additional design and installation requirements.

[2]Allowable loads shown are for installations in wood members complying with Section 3.29.2.

[3]See Section 3.29.3 for required fastener dimensions and mechanical properties.

[4]The length of CMSTC16 strap tie is approximately 54 feet. The CMSTC16 strap tie may be cut to length as necessary for the application provided the minimum nailing requirements at each end are met.

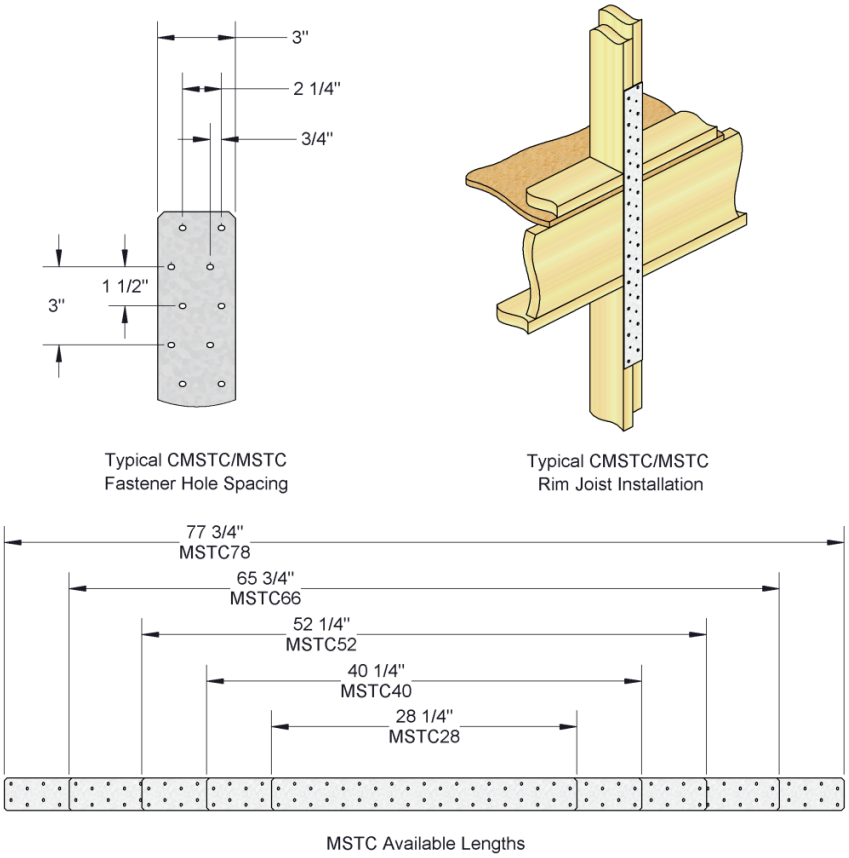

FIGURE 5—MSTC AND CMSTC STRAP TIE

TABLE 6—CSH-TZ CONCEALED STRINGER HANGER

STOCK NO.	STEEL GAGE	DIMENSIONS (in.)				FASTENER SCHEDULE[3]					ALLOWABLE LOADS (lbs)[1,2,4]		
		JOIST WIDTH	HANGER			Rim/Band Joist		Stringer			Download		
			W	H	D	Qty	Type	Wide Face Qty	Narrow Face Qty	Type	C_D = 1.0	C_D = 1.15	C_D = 1.25
CSH-TZ	18	$1^1/_2$	$1^7/_{16}$	5	5	8	10d x $1^1/_2$	4	1	10d x $1^1/_2$	875	875	875

For **SI:** 1 inch = 25.4 mm, 1 lbf = 4.45 N, 1 psi = 6.895 kPa.

[1]Allowable loads have been adjusted for load duration factors, C_D, as shown, in accordance with the NDS. The allowable loads do not apply to loads of other durations and are not permitted to be adjusted for other load durations. See Sections 4.1 and 4.2 for additional design and installations requirements.

[2]Allowable loads shown are for installations in wood members complying with Section 3.29.2 and are based on the use of wood members with a reference compression perpendicular to grain design value, $F_{c\text{-}perp}$, of 625 psi or greater.

[3]See Section 3.29.3 for required fastener dimensions and mechanical properties.

[4]The CSH-TZ is designed to support stair stringers and has not been torsionally tested for support of floor and roof framing members.

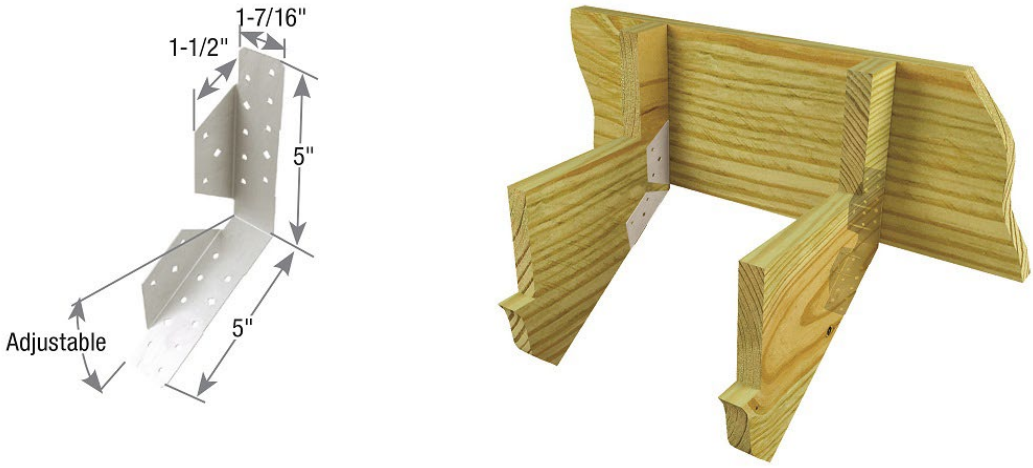

CSH-TZ Concealed Stringer Hanger Typical CSH-TZ Installation

FIGURE 6—CSH-TZ CONCEALED STRINGER HANGER

TABLE 7a—FOUNDATION WALL ANCHOR FWAN-TZ CENTERED INSTALLATION[5]

STOCK NO.	SILL PLATE	FASTENER SCHEDULE[3]				RIM BOARD MATERIAL	ALLOWABLE LOADS (LBS)[1,2]					
		Sill Plate		Rim Board[7]			F_1[4]			F_2[4]		
							C_D			C_D		
		Qty	Type	Qty	Type		0.9	1.0	1.6	0.9	1.0	1.6
FWAN-TZ	2X4 2-2X4 3X4 4X4	8	10d x $1^1/_2$	4	10d x $1^1/_2$	$1^1/_8$ OSB	415	415	415	915	1,000	1,070
		8	10d x $1^1/_2$	4	10d x $1^1/_2$	2x Rim	455	500	525	915	1,000	1,385
		8	10d x $1^1/_2$	4	10d x $1^1/_2$	$1^3/_4$ LVL	455	500	525	915	1,000	1,385
	2X6 2-2X6 3X6 4X6	12	10d x $1^1/_2$	4	10d x $1^1/_2$	$1^1/_8$ OSB	415	415	415	1,370	1,475	1,475
		12	10d x $1^1/_2$	4	10d x $1^1/_2$	2x Rim	455	500	525	1,370	1,500	1,660
		12	10d x $1^1/_2$	4	10d x $1^1/_2$	$1^3/_4$ LVL	455	500	525	1,370	1,500	1,660

For **SI:** 1 inch = 25.4 mm, 1 lbs = 4.45 N.

TABLE 7b—FOUNDATION WALL ANCHOR FWAN-TZ OFFSET INSTALLATION[5,6]

STOCK NO.	SILL PLATE	FASTENER SCHEDULE[3]				RIM BOARD MATERIAL	ALLOWABLE LOADS (LBS)[1,2]					
		Sill Plate		Rim Board[7]			F_1[4]			F_2[4]		
							C_D			C_D		
		Qty	Type	Qty	Type		0.9	1.0	1.6	0.9	1.0	1.6
FWAN-TZ	2X4 2-2X4 3X4 4X4	8	10d x $1^1/_2$	4	10d x $1^1/_2$	$1^1/_8$ OSB	415	415	415	525	525	525
		8	10d x $1^1/_2$	4	10d x $1^1/_2$	2x Rim	455	500	525	915	995	995
		8	10d x $1^1/_2$	4	10d x $1^1/_2$	$1^3/_4$ LVL	455	500	525	915	995	995
	2X6 2-2X6 3X6 4X6	12	10d x $1^1/_2$	4	10d x $1^1/_2$	$1^1/_8$ OSB	415	415	415	525	525	525
		12	10d x $1^1/_2$	4	10d x $1^1/_2$	2x Rim	455	500	525	995	995	995
		12	10d x $1^1/_2$	4	10d x $1^1/_2$	$1^3/_4$ LVL	455	500	525	995	995	995

For **SI:** 1 inch = 25.4 mm, 1 lb = 4.45 N.

Notes for both Tables 7a and 7b:

[1]Allowable loads have been adjusted for a load duration factors, C_D, as shown, in accordance with the NDS. The allowable loads do not apply to loads of other durations, and are not permitted to be adjusted for other load durations. See Sections 4.1 and 4.2 for additional design and installation requirements.

[2]Allowable loads shown are for installations in wood members complying with Section 3.29.2.

[3]See Section 3.29.3 for required fastener dimensions and mechanical properties.

[4]F_1 loads are parallel to the sill plate and F_2 loads are perpendicular to the sill plate. See Figure 7.

[5]The designer must specify the type, size, and spacing of fasteners connecting the sill plate to the foundation wall.

[6]Offset installation requires that the FWAN-TZ be installed within 4 inches of the joist/blocking.

[7]Centered installation: fill only triangle holes when nailing to the rim board. Offset installation: fill only diamond holes when nailing to the rim board.

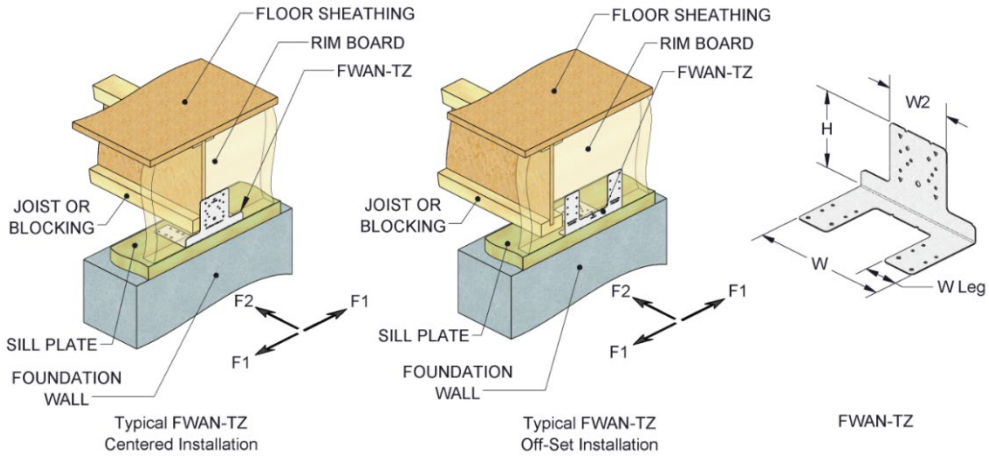

FIGURE 7—FWAN-TZ FOUNDATION WALL ANCHOR AND TYPICAL INSTALLATION DETAILS

TABLE 8—HH HEADER HANGER ALLOWABLE LOADS[1,2,3]

STOCK NO.	STEEL GAGE	DIMENSIONS (inches)		FASTENER SCHEDULE				ALLOWABLE LOADS (lbs)					
		W	H	Header		Stud		F_1			F_2	F_3	F_4
				Qty	Type	Qty	Type	$C_D = 1.0$	$C_D = 1.15$	$C_D = 1.25$	$C_D = 1.6$	$C_D = 1.6$	$C_D = 1.6$
HH44	16	$3^9/_{16}$	$3^1/_4$	4	16d Common	9	16d Common	1,325	1,500	1,620	835	895	1,390
HH66	16	$5^1/_2$	$5^1/_4$	6	16d Common	12	16d Common	1,765	2,000	2,160	1,025	1345	2,400

For **SI:** 1 inch = 25.4 mm, 1 lb = 4.45 N.

[1]Allowable loads have been adjusted for load duration factors, C_D, as shown, in accordance with the NDS. The allowable loads do not apply to loads of other durations, and are not permitted to be adjusted for other load durations. See Sections 4.1 and 4.2 for design and installation requirements.

[2]Allowable loads shown are for installations in wood members complying with Section 3.29.2.

[3]See Section 3.29.3 for required fastener dimensions and mechanical properties.

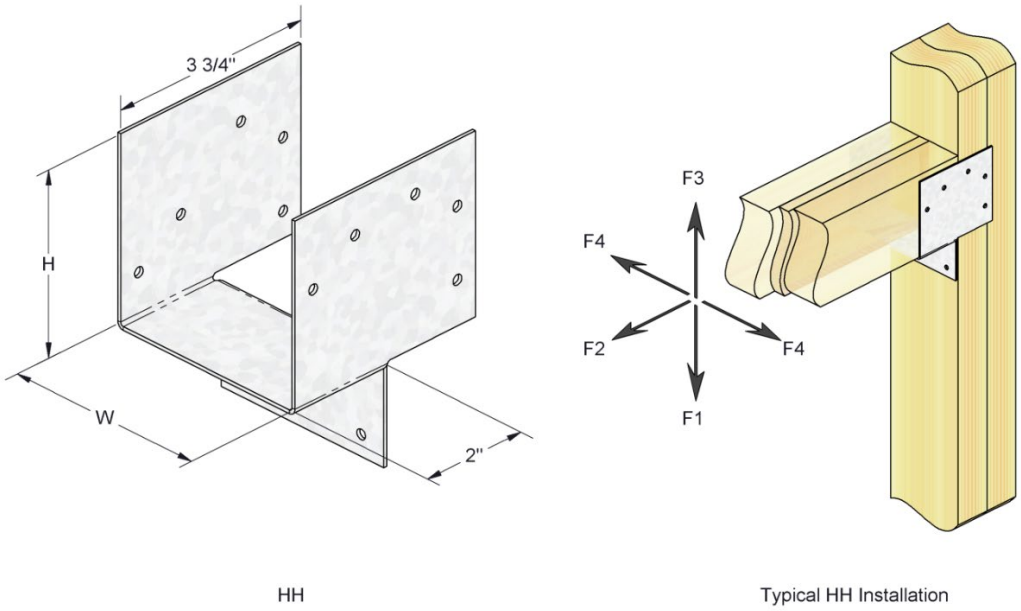

FIGURE 8—HH HEADER HANGER

TABLE 9—NAILING SCHEDULES, DIMENSIONS AND ALLOWABLE LOADS FOR HTW, LTW AND MTW TWIST STRAP TIES[5]

STOCK NUMBER	STEEL GAGE	STRAP DIMENSIONS (in.)				FASTENER SCHEDULE		ALLOWABLE UPLIFT LOAD[1,2] C_D = 1.6 (lbs)	
		W	L	L1	L2	Qty [3]	Type [4]	Stud-to-rim joist installation	Truss-to-top – plate installation
HTW16	14	$1^1/_4$	16	$5^1/_8$	$5^1/_8$	16	10d x $1^1/_2$	1,115	1,355
						16	10d Common	1,300	1,355
HTW20	14	$1^1/_4$	20	$7^1/_8$	$7^1/_8$	24	10d x $1^1/_2$	1,555	1,355
						20	10d Common	1,355	1,355
HTW24	14	$1^1/_4$	24	$9^1/_8$	$9^1/_8$	24	10d x $1^1/_2$	1,555	1,355
						20	10d Common	1,355	1,355
HTW28	14	$1^1/_4$	28	$11^1/_8$	$11^1/_8$	24	10d x $1^1/_2$	1,555	1,355
						20	10d Common	1,355	1,355
HTW30	14	$1^1/_4$	30	7	$17^1/_4$	24	10d x $1^1/_2$	1,555	1,355
						20	10d Common	1,355	1,355
HTW30C	14	$1^1/_4$	30	$12^1/_8$	$12^1/_8$	24	10d x $1^1/_2$	1,555	1,355
						20	10d Common	1,355	1,355
LTW12	18	$1^1/_4$	12	$4^1/_2$	$4^1/_2$	12	10d x $1^1/_2$	770	625
						12	10d Common	770	625
LTW16	18	$1^1/_4$	16	$6^1/_2$	$6^1/_2$	12	10d x $1^1/_2$	770	625
						12	10d Common	770	625
LTW18	18	$1^1/_4$	18	$7^1/_2$	$7^1/_2$	12	10d x $1^1/_2$	770	625
						12	10d Common	770	625
LTW20	18	$1^1/_4$	20	$8^1/_2$	$8^1/_2$	12	10d x $1^1/_2$	770	625
						12	10d Common	770	625
MTW12	16	$1^1/_4$	12	$4^1/_2$	$4^1/_2$	14	10d x $1^1/_2$	1,185	965
						14	10d Common	1,185	965
MTW16	16	$1^1/_4$	16	$6^1/_2$	$6^1/_2$	14	10d x $1^1/_2$	1,185	965
						14	10d Common	1,185	965
MTW18	16	$1^1/_4$	18	$7^1/_2$	$7^1/_2$	14	10d x $1^1/_2$	1,185	965
						14	10d Common	1,185	965
MTW20	16	$1^1/_4$	20	$8^1/_2$	$8^1/_2$	14	10d x $1^1/_2$	1,185	965
						14	10d Common	1,185	965
MTW24C	16	$1^1/_4$	24	$10^7/_{16}$	$10^7/_{16}$	14	10d x $1^1/_2$	1,185	965
						14	10d Common	1,185	965
MTW28C	16	$1^1/_4$	28	$12^7/_{16}$	$12^7/_{16}$	14	10d x $1^1/_2$	1,185	965
						14	10d Common	1,185	965
MTW30C	16	$1^1/_4$	30	$13^7/_{16}$	$13^7/_{16}$	14	10d x $1^1/_2$	1,185	965
						14	10d Common	1,185	965
MTW30	16	$1^1/_4$	30	$8^5/_{16}$	$18^9/_{16}$	14	10d x $1^1/_2$	1,185	965
						14	10d Common	1,185	965

For **SI:** 1 inch = 25.4 mm, 1 lb = 4.45 N.

[1]Allowable uplift loads have been adjusted for a load duration factor, C_D, of 1.60, corresponding to a ten-minute load duration (i.e., wind or earthquake loading), in accordance with the NDS. The allowable loads do not apply to loads of other durations, and are not permitted to be adjusted for other load durations. See Section 4.1 for additional design requirements.

[2]Allowable uplift loads shown are for installations in sawn lumber or structural composite lumber complying with Section 3.29.2.

[3]Listed fastener quantity is the total required for the connection, with half the tabulated quantity at each end.

[4]See Section 3.29.3 for required nail dimensions and mechanical properties. HTW, LTW and MTW twist strap ties may be installed with either 10d x $1^1/_2$ or 10d common nails.

[5]Some illustrations for the twist straps show connection that could cause cross-grain tension or bending of the wood during loading if not reinforced sufficiently. In such cases, mechanical reinforcement should be considered.

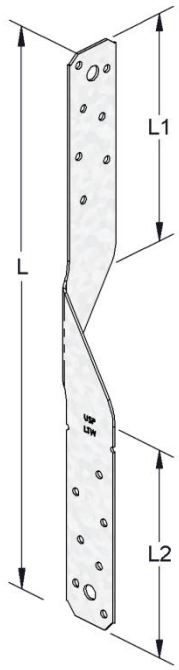

LTW/MTW/HTW

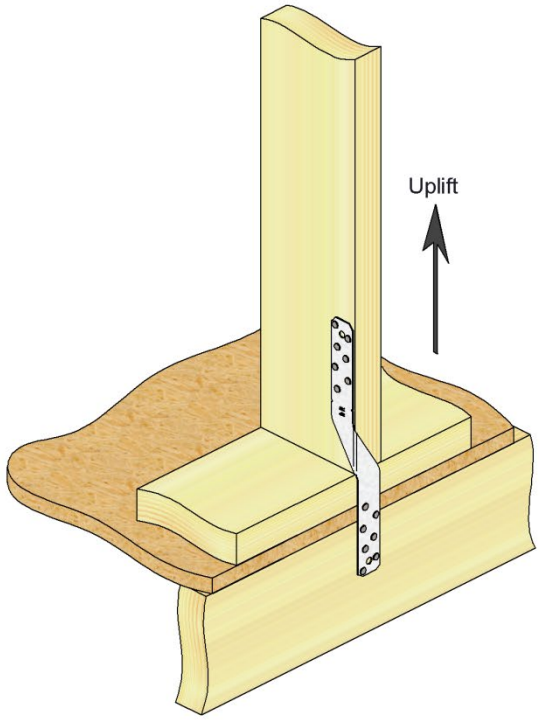

Typical LTW/MTW/HTW
Stud-To-Rim Joist Installation

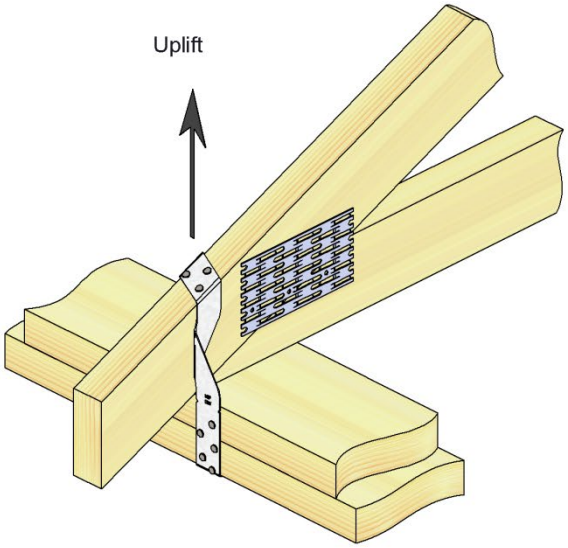

Typical LTW/MTW/HTW
Truss-To-Top Plate Installation

FIGURE 9—DIMENSIONS AND INSTALLATION OF LTW, MTW AND HTW TWIST STRAP TIES

TABLE 10—JA JOIST ANGLE ALLOWABLE LOADS[4, 5]

STOCK NO.	STEEL GA.	DIMENSIONS (in.)		FASTENER SCHEDULE[1 2]				ALLOWABLE LOADS (lbs.)[3]					
		W	L	Header		Joist		F_1				F_2	F_3
				Qty	Type	Qty	Type	C_D = 1.0	C_D = 1.15	C_D = 1.25	C_D = 1.6	C_D = 1.6	C_D = 1.6
JA1	16	$1^1/_2$	$1^1/_4$	2	10d x $1^1/_2$	2	10d x $1^1/_2$	220	220	220	220	300	150
JA3	14	$2^1/_2$	3	4	16d	4	10d x $1^1/_2$	495	495	495	495	465	330
JA5	14	$2^1/_2$	5	6	16d	6	10d x $1^1/_2$	790	825	825	825	890	495
JA7	14	$2^1/_2$	7	8	16d	8	10d x $1^1/_2$	1,055	1,185	1,270	1,560	1,450	490
JA9	14	$2^1/_2$	9	10	16d	10	10d x $1^1/_2$	1,320	1,485	1,590	1,950	1,465	775

For **SI:** 1 inch = 25.4 mm, 1 lb = 4.45 N.

[1]Allowable loads have been adjusted for load duration factors, C_D, as shown, in accordance with the NDS. The allowable loads do not apply to loads of other durations, and are not permitted to be adjusted for other load durations. See Sections 4.1 and 4.2 for additional design and installations requirements.

[2]See Section 3.29.3 for required fastener dimensions and mechanical properties.

[3]Allowable loads shown are for installations in wood members complying with Section 3.29.2.

[4]Refer to drawings below for illustrations of each load direction. The "F_1" load direction is that which results in lateral loading of all nails. The "F_2" load direction is that which results in the wood joist bearing on one leg of the angle, and lateral loading on the header nails. The "F_3" load direction is that which results in a withdrawal load on either the joist nails or the header nails.

[5]Tabulated allowable loads are for a single connector. When using a single angle, the joist must be constrained to provide fixity against rotation.

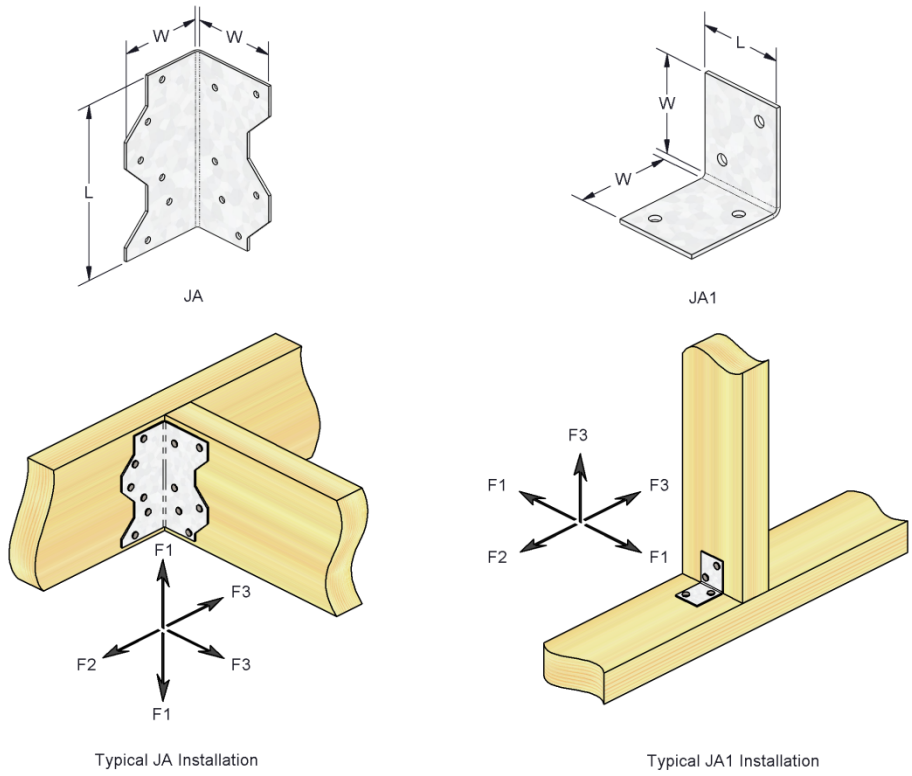

FIGURE 10—JA JOIST ANGLE

TABLE 11—KSA & KHSA CONNECTOR STRAPS[1,2,3,4]

STOCK NO.	STEEL GAGE	DIMENSIONS (inches)					FASTENER SCHEDULE				ALLOWABLE TENSION LOADS (lbs)[5]	
		W	L	O	D1	D2	Nails		Bolts		Nails	Bolts[6]
							Qty	Type	Qty	Dia.	$C_D = 1.6$	$C_D = 1.6$
KSA36	12	$2^1/_{16}$	$37^7/_8$	9	$6^{11}/_{16}$	$4^1/_2$	22	16d Common	4	$^1/_2$	2,620	2,015
KHSA1	3	3	30	9	10	-	-	-	2	$^3/_4$	-	2,435
KHSA2	3	3	$38^1/_2$	9	10	$4^1/_2$	-	-	4	$^3/_4$	-	4,810
KHSA3	3	3	47	9	10	$4^1/_2$	-	-	6	$^3/_4$	-	7,005
KHSA4	3	3	56	9	10	$4^1/_2$	-	-	8	$^3/_4$	-	8,920
KHSA5	3	$3^1/_2$	$64^1/_2$	9	10	$4^1/_2$	-	-	10	$^3/_4$	-	10,785

For **SI:** 1 inch = 25.4 mm, 1 lb = 4.45 N.

[1]Allowable loads correspond to a load duration factor, C_D, as shown, in accordance with the NDS. The allowable loads do not apply to loads of other durations, and are not permitted to be adjusted for other load durations. See Sections 4.1 and 4.2 for design and installation requirements.
[2]Allowable loads shown are for installations in wood members complying with Section 3.29.2. Wood members must have minimum dimensions of 3.5 inches (89 mm) in the direction parallel to the bolt axis.
[3]See Section 3.29.3 for required fastener dimensions and mechanical properties.
[4]Eccentric loading conditions must be considered in connection design.
[5]Allowable nail loads and bolt loads are not permitted to be added together.
[6]Allowable bolt loads are for single shear conditions.

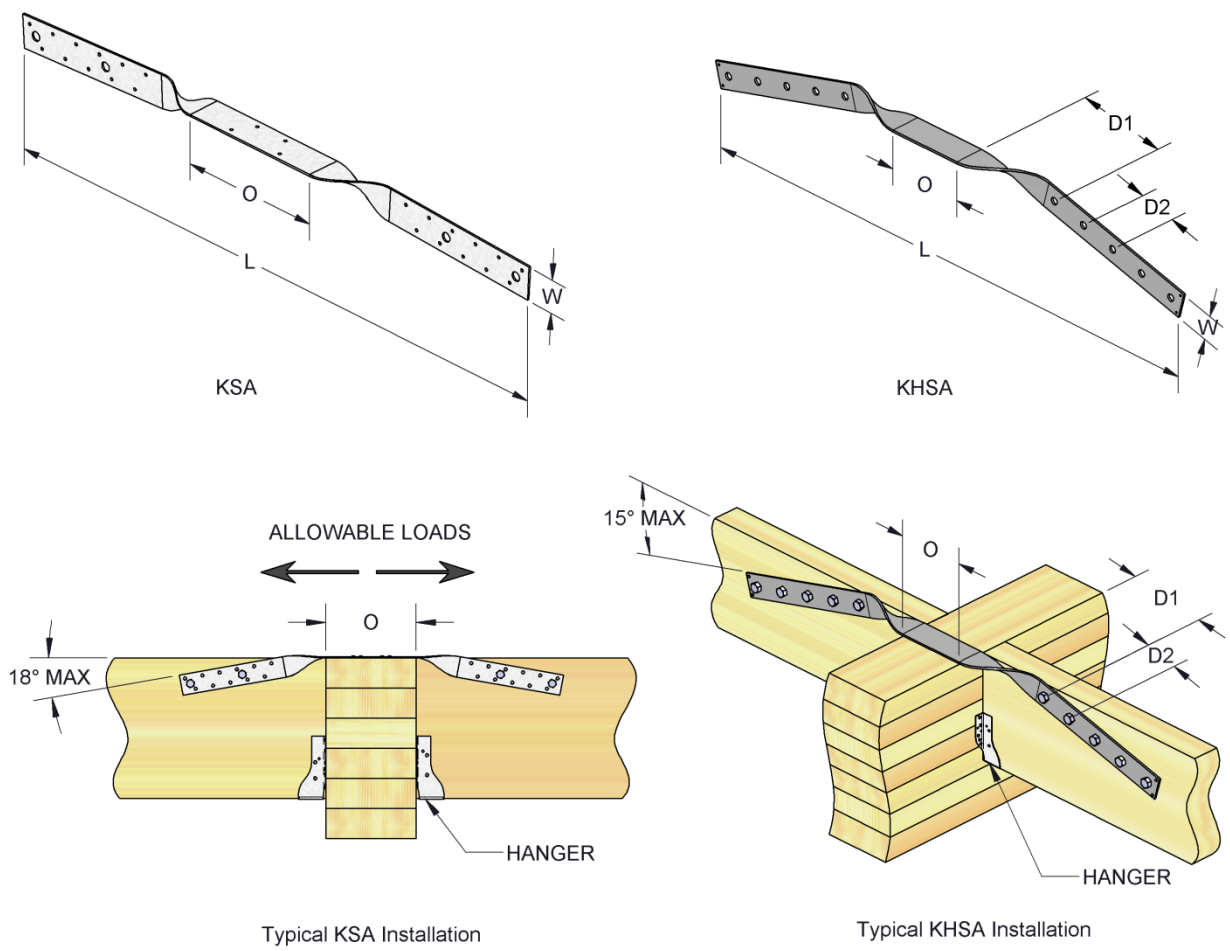

FIGURE 11—KSA & KHSA CONNECTOR STRAPS

TABLE 12—KHST STRAP TIE ALLOWABLE TENSION LOADS[1,2,3,4,5]

STOCK NO.	STEEL GAGE	DIMENSIONS (in.)		FASTENER SCHEDULE		ALLOWABLE TENSION LOADS (lbs)
		W	L	Total Quantity	Bolt Diameter	C_D = 1.6
KHST2	7	$2^1/_2$	$21^1/_4$	6	$^5/_8$	5,345
KHST3	3	3	$25^1/_2$	6	$^3/_4$	7,920
KHST5	7	5	$21^1/_4$	12	$^5/_8$	10,825
KHST6	3	6	$25^1/_2$	12	$^3/_4$	15,935

For **SI:** 1 inch = 25.4 mm, 1 lb = 4.45 N.

[1]Allowable loads have been adjusted for a load duration factor, C_D, as shown, in accordance with the NDS. The allowable tension loads do not apply to loads of other durations, and are not permitted to be adjusted for other load durations. See Sections 4.1 and 4.2 for design and installation requirements.

[2]Allowable loads are for installations in wood members complying with Section 3.29.2.

[3]See Section 3.29.3 for required fastener dimensions and mechanical properties.

[4]Straps must be centered lengthwise on the joint between the two members.

[5]Allowable loads are for loading directions parallel to the grain in both wood members.

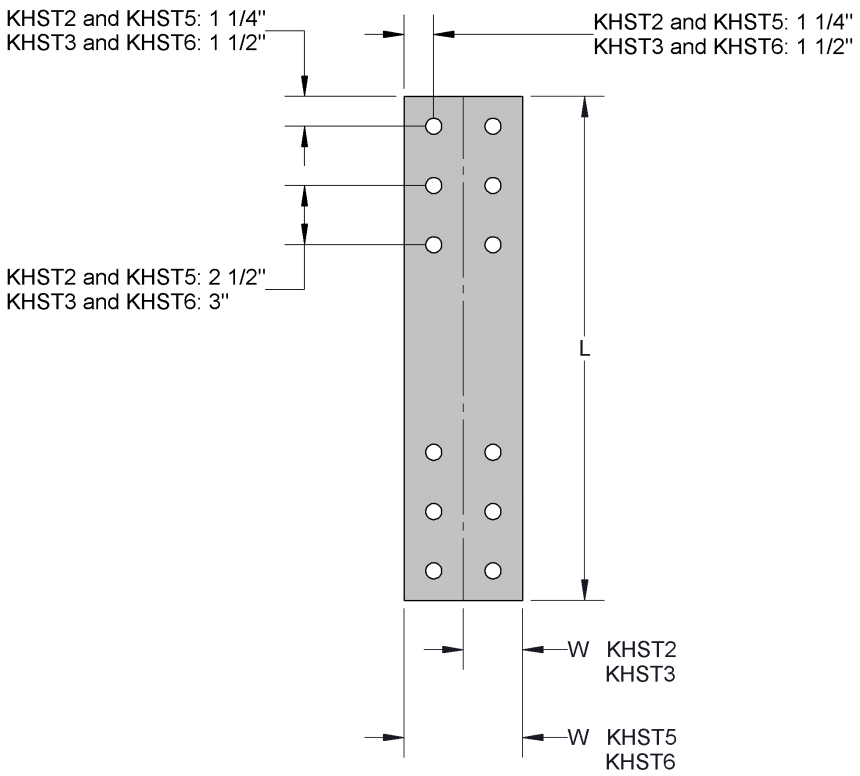

FIGURE 12—KHST STRAP TIE

TABLE 13—KRPS STRAP TIE SERIES ALLOWABLE TENSION LOADS (LBS)

STOCK NO.	STEEL GA.	DIMENSIONS (INCHES)			FASTENER SCHEDULE[1]		ALLOWABLE LOADS[2]
		W	L	Notch Width	Qty	Type	C_D = 1.6
KRPS18	16	$1^1/_2$	$18^5/_{16}$	≤ $5^1/_2$	12	16d Common	1,345
KRPS22	16	$1^1/_2$	$22^5/_{16}$	≤ $5^1/_2$	12	16d Common	1,345
					16		1,790
KRPS28	16	$1^1/_2$	$28^5/_{16}$	≤ 12	12	16d Common	1,345
					16		1,790

For **SI:** 1 inch = 25.4 mm, 1 lb = 4.45 N.

[1]Allowable loads have been adjusted for a load duration factor, C_D, as shown, in accordance with the NDS. The allowable tension loads do not apply to loads of other durations, and are not permitted to be adjusted for other load durations. See Sections 4.1 and 4.2 for design and installation requirements.

[2]Allowable loads are for installations in wood members complying with Section 3.29.2.

[3]See Section 3.29.3 for required fastener dimensions and mechanical properties.

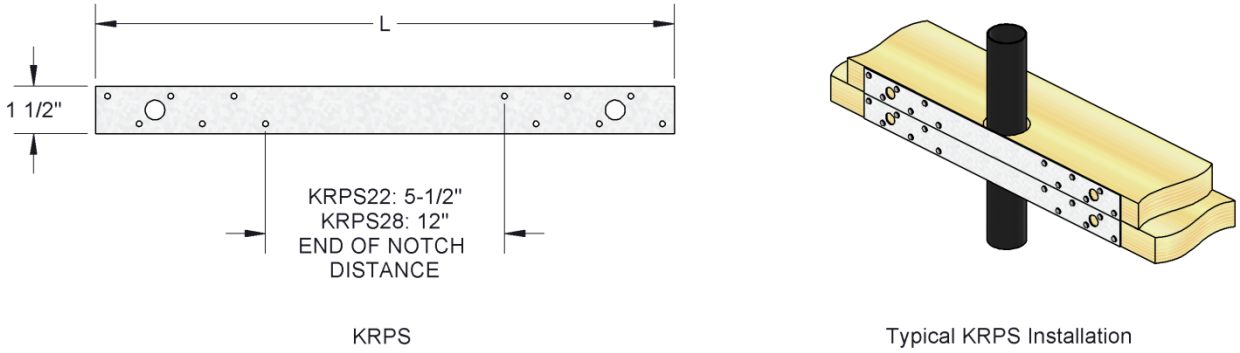

FIGURE 13—KRPS STRAP TIE AND TYPICAL INSTALLATION DETAIL

TABLE 14—KST, KSTI AND LSTI STRAP TIE ALLOWABLE LOADS[1,2,3,4]

STOCK NO.	STEEL GAGE	DIMENSIONS (inches)		FASTENER SCHEDULE					ALLOWABLE DESIGN LOADS (lbs)					
				Nailed			Bolted [5]		Nailed [6,7]			Bolted [5, 6]		
									C_D = 1.6			C_D = 1.6		
		W	L	Total Qty.	Min Qty.	Nail Type	Min Qty.	Bolt Dia.	SG=0.42	SG=0.50	SG=0.55	SG=0.42	SG=0.50	SG=0.55
KST116	20	$^3/_4$	$16^5/_{16}$	10	8	16d Com.	-	-	665	665	665	-	-	-
KST29	20	$1^3/_4$	$9^7/_{16}$	14	14	16d Com.	-	-	1,320	1,545	1,680	-	-	-
KST213	20	$1^3/_4$	$12^{11}/_{16}$	18	18	16d Com.	-	-	1,700	1,785	1,785	-	-	-
KST216	20	$1^3/_4$	$15^{15}/_{16}$	22	18	16d Com.	-	-	1,700	1,785	1,785	-	-	-
KST218	16	$1^3/_4$	$19^3/_{16}$	26	26	16d Com.	-	-	2,540	2,955	2,960	-	-	-
KST224	16	$1^3/_4$	$22^7/_{16}$	30	30	16d Com.	-	-	2,930	2,960	2,960	-	-	-
KST234	14	$1^3/_4$	$32^3/_{16}$	42	36	16d Com.	-	-	3,660	3,775	3,775	-	-	-
KST227 [6]	12	$2^1/_{16}$	27	34	34	16d Com.	4	$^1/_2$	3,645	4,215	4,540	2,020	2,190	2,285
KST237 [6]	12	$2^1/_{16}$	$37^1/_2$	48	48	16d Com.	6	$^1/_2$	5,140	5,140	5,140	2,875	3,105	3,240
KST248 [6]	12	$2^1/_{16}$	48	62	54	16d Com.	8	$^1/_2$	5,140	5,140	5,140	3,555	3,825	3,915
KST260 [6]	10	$2^1/_{16}$	60	72	64	16d Com.	10	$^1/_2$	6,720	6,720	6,720	4,425	4,695	4,910
KST272 [6]	10	$2^1/_{16}$	72	72	64	16d Com.	10	$^1/_2$	6,720	6,720	6,720	4,425	4,695	4,910
KSTI226	12	$2^1/_{16}$	26	26	26	10d x $1^1/_2$	-	-	2,390	2,765	2,975	-	-	-
KSTI236	12	$2^1/_{16}$	36	36	36	10d x $1^1/_2$	-	-	3,310	3,830	4,120	-	-	-
KSTI248	12	$2^1/_{16}$	48	48	48	10d x $1^1/_2$	-	-	4,415	5,105	5,140	-	-	-
KSTI260	12	$2^1/_{16}$	60	60	60	10d x $1^1/_2$	-	-	5,140	5,140	5,140	-	-	-
KSTI272	12	$2^1/_{16}$	72	72	60	10d x $1^1/_2$	-	-	5,140	5,140	5,140	-	-	-
LSTI49	18	$3^3/_4$	49	32	32	10d x $1^1/_2$	-	-	2,560	2,970	3,225	-	-	-
LSTI73	18	$3^3/_4$	73	48	48	10d x $1^1/_2$	-	-	3,840	4,130	4,130	-	-	-

For **SI:** 1 inch = 25.4 mm, 1 lb = 4.45 N.

[1]Allowable loads have been adjusted for a load duration factor, C_D, of 1.6, corresponding to a ten minute load duration (i.e., wind or earthquake loading), in accordance with the NDS. The allowable loads do not apply to loads of other durations, and are not permitted to be adjusted for other load durations. See Sections 4.1 and 4.2 for additional design and installation requirements.

[2]Allowable loads shown are for installations in wood members complying with Section 3.29.2, except that the KST, KSTI and LSTI straps may be attached to wood members having a minimum specific gravity of 0.42, 0.50 or 0.55, as shown, respectively.

[3]See Section 3.29.3 for required fastener dimensions and mechanical properties.

[4]The minimum fastener quantity indicated is the minimum number of fasteners required, with half of the required number of fasteners at each end of the connection.

[5]For installations with bolts, the bearing length of the bolts within each wood member must be 3 inches (76.2 mm) or greater. Bolts must be loaded parallel to the wood grain, and proper end and edge distances must be provided in accordance with Section 4.1 of this report.

[6]Allowable loads for installations with nails and bolts are not permitted to be added together.

[7]For installations with nails, the minimum required number of nails must be used as indicated, with all nail holes between the two inner-most bolt holes being filled first. The strap must also be centered over the connection, lengthwise.

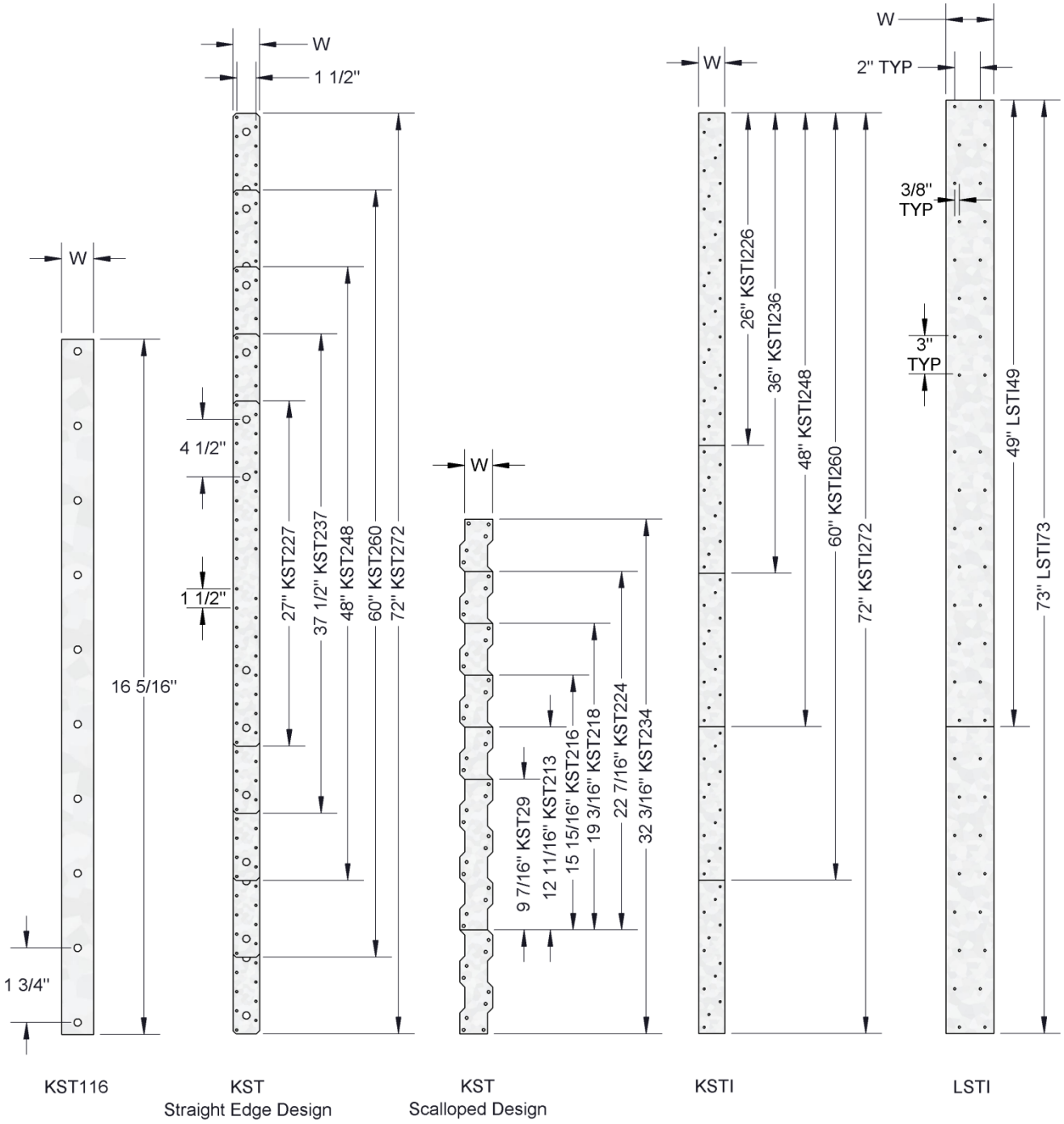

FIGURE 14—KST, KSTI AND LSTI STRAP TIES

TABLE 15—KVB AND KVBI KNEE BRACE ALLOWABLE TENSION LOADS[1,2,3,4]

STOCK NO.	STEEL GAGE	DIMENSIONS (in)			FASTENER SCHEDULE				ALLOWABLE TENSIONS LOADS (lbs)			
					Beam		Joist					
		Beam Depth	W	L	Qty	Type	Qty	Type	C_D = 1.0	C_D = 1.15	C_D = 1.25	C_D = 1.6
KVB5	12	10" - 15"	$2^1/_{16}$	60	4	WS3	12	WS3	1,920	1,920	1,920	1,920
KVB7	12	15" - 22 $^1/_2$"	$2^1/_{16}$	84	4	WS3	12	WS3	1,920	1,920	1,920	1,920
KVB8	12	$22^1/_2$" - $28^1/_2$"	$2^1/_{16}$	96	4	WS3	12	WS3	1,920	1,920	1,920	1,920
KVB10	12	$28^1/_2$" - 36"	$2^1/_{16}$	120	4	WS3	12	WS3	1,920	1,920	1,920	1,920
KVB12	12	36" - 42"	$2^1/_{16}$	144	4	WS3	12	WS3	1,920	1,920	1,920	1,920
KVBI5	12	10" - 15"	$2^1/_{16}$	60	4	10d Common	12	10d Common	895	995	1,060	1,275
KVBI7	12	15" - $22^1/_2$"	$2^1/_{16}$	84	6	10d Common	12	10d Common	895	995	1,060	1,275
KVBI8	12	$22^1/_2$" - $28^1/_2$"	$2^1/_{16}$	96	6	10d Common	12	10d Common	895	995	1,060	1,275
KVBI10	12	$28^1/_2$" - 36"	$2^1/_{16}$	120	6	10d Common	12	10d Common	895	995	1,060	1,275
KVBI12	12	36" - 42"	$2^1/_{16}$	144	6	10d Common	12	10d Common	895	995	1,060	1,275

For **SI:** 1 inch = 25.4 mm, 1 lb = 4.45 N.

[1]Allowable loads correspond to load duration factor, C_D, values as shown in accordance with the NDS. The allowable loads do not apply to loads of other durations, and are not permitted to be adjusted for other load durations. See Sections 4.1 and 4.2 for design and installation requirements.
[2]Allowable loads shown are for installations in wood members complying with Section 3.29.2.
[3]Allowable loads apply to tensile loads along the length of the strap. Install flanges at angles of 45 degrees or more to the vertical plane to assure proper lateral resistance.
[4]See Section 3.29.3 for required fastener dimensions and mechanical properties.

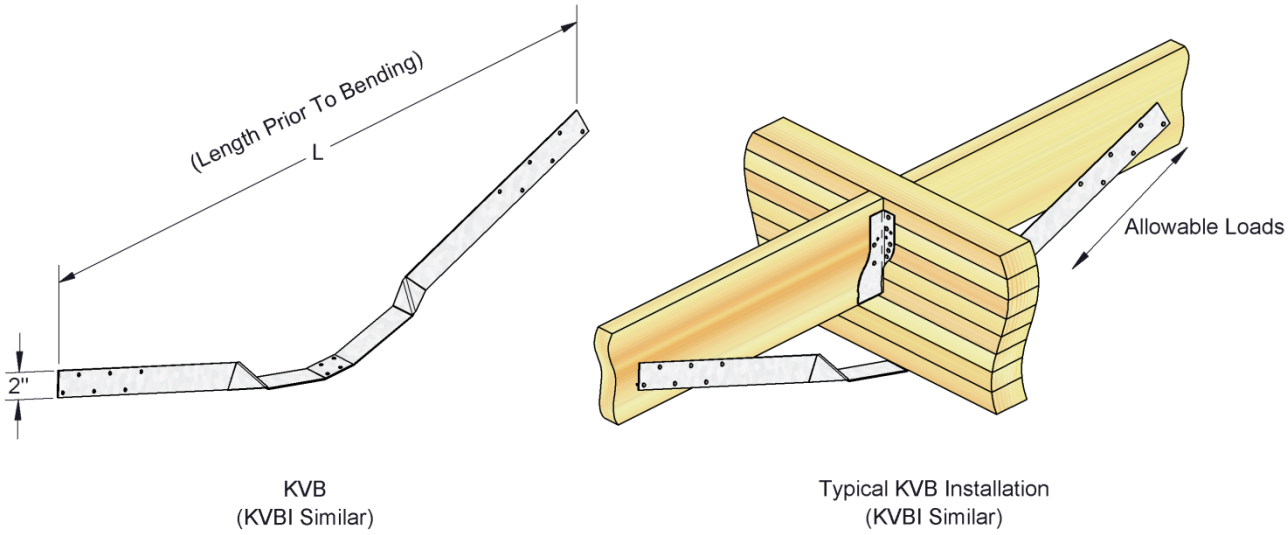

FIGURE 15—KVB KNEE BRACE

TABLE 16—NAILING SCHEDULES, DIMENSIONS AND ALLOWABLE LOADS FOR LFTA6 STRAP TIE

STOCK NUMBER	STEEL GAGE	DIMENSIONS (in.)				FASTENER SCHEDULE		ALLOWABLE LOADS[1,2,5,6] (lbs)		
								Uplift	Lateral F_1	Lateral F_2
		W	L	L1	L2	Qty[4]	Type[3]	C_D = 1.6	C_D = 1.6	C_D = 1.6
LFTA6	16	$2^1/_4$	$19^1/_8$	$8^3/_8$	$6^1/_2$	16	8d Common	980	745	120
						16	8d x $1^1/_2$	980	745	120

For **SI:** 1 inch = 25.4 mm, 1 lb = 4.45 N.

[1]Allowable loads have been adjusted for a load duration factor, C_D, of 1.60, corresponding to a ten-minute load duration (i.e., wind or earthquake loading), in accordance with the NDS. The allowable loads do not apply to loads of other durations, and are not permitted to be adjusted for other load durations. See Section 4.1 and Section 4.2 for additional design requirements and installation details.

[2]Allowable loads shown are for installations in sawn lumber or structural composite lumber complying with Section 3.29.2.

[3]See Section 3.29.3 for required nail dimensions and mechanical properties.

[4]Listed fastener quantity is the total required for the connection, with half the quantity at each end.

[5]Lateral F_1 and F_2 load directions do not apply to roof truss-to-top plate installations.

[6]Some illustrations for the strap tie show connection that could cause cross-grain tension or bending of the wood during loading if not reinforced sufficiently. In such cases, mechanical reinforcement should be considered.

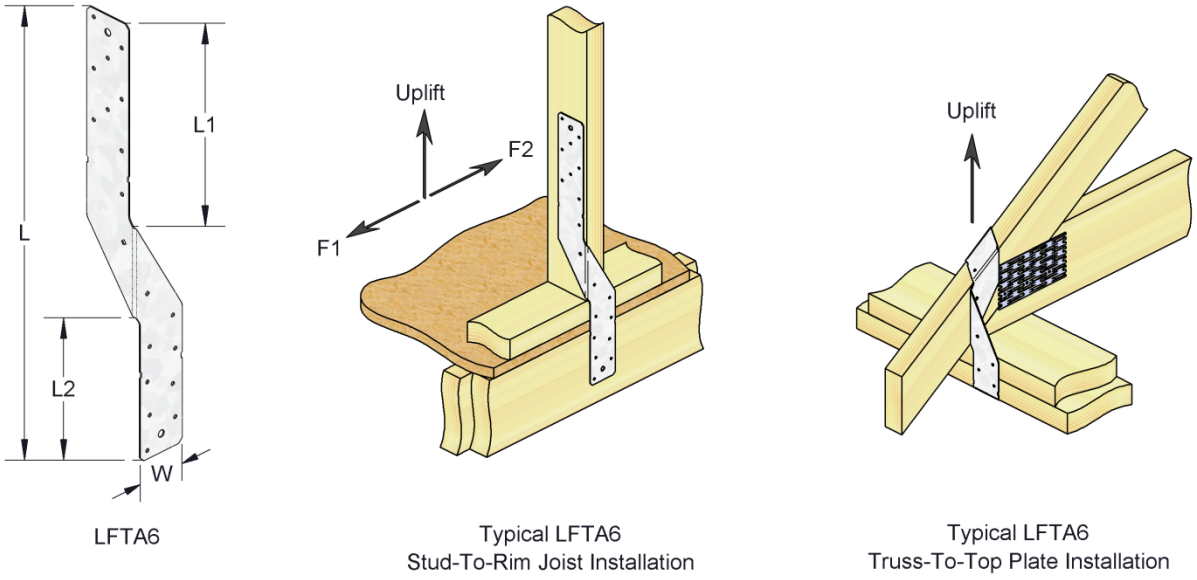

FIGURE 16—DIMENSIONS AND INSTALLATION OF LFTA6 STRAP TIE

TABLE 17—LSTA AND MSTA STRAP TIE ALLOWABLE LOADS[1,2,3,4]

STOCK NO.	STEEL GA	DIMENSIONS (inches)		FASTENER SCHEDULE			ALLOWABLE LOADS (lbs)	
							SG = 0.50 or greater	SG = 0.42 to 0.49
		W	L	Total Qty.	Min Qty.	Nail Type	C_D = 1.6	C_D = 1.6
LSTA9	20	$1^1/_4$	9	8	8	10d Common	740	635
LSTA12	20	$1^1/_4$	12	10	10	10d Common	930	790
LSTA15	20	$1^1/_4$	15	12	12	10d Common	1,115	950
LSTA18	20	$1^1/_4$	18	14	14	10d Common	1,235	1,110
LSTA21	20	$1^1/_4$	21	16	16	10d Common	1,235	1,235
LSTA24	20	$1^1/_4$	24	18	16	10d Common	1,235	1,235
LSTA30	18	$1^1/_4$	30	22	22	10d Common	1,640	1,640
LSTA36	18	$1^1/_4$	36	26	22	10d Common	1,640	1,640
MSTA9	18	$1^1/_4$	9	8	8	10d Common	750	645
MSTA12	18	$1^1/_4$	12	10	10	10d Common	935	810
MSTA15	18	$1^1/_4$	15	12	12	10d Common	1,125	970
MSTA18	18	$1^1/_4$	18	14	14	10d Common	1,310	1,130
MSTA21	18	$1^1/_4$	21	16	16	10d Common	1,500	1,295
MSTA24	18	$1^1/_4$	24	18	18	10d Common	1,640	1,455
MSTA30	16	$1^1/_4$	30	22	22	10d Common	2,065	1,815
MSTA36	16	$1^1/_4$	36	26	26	10d Common	2,065	2,065
MSTA48	16	$1^1/_4$	48	32	26	10d Common	2,045	2,045

For **SI:** 1 inch = 25.4 mm, 1 lb = 4.45 N.

[1]Allowable loads have been adjusted for load duration factors, C_D, of 1.6, corresponding to a ten-minute load duration (i.e., wind or earthquake loading), in accordance with the NDS. The allowable loads do not apply to loads of other durations. See Sections 4.1 and 4.2 for additional design and installations requirements.

[2]See Section 3.29.3 for required fastener dimensions and mechanical properties.

[3]Allowable loads shown are for installations in wood members complying with Section 3.29.2, except that the LSTA and MSTA strap ties may be attached to wood members having a specific gravity from 0.42 to 0.49, as shown.

[4]"Total Qty" refers to the total number of nail holes provided in the strap. "Min Qty" is the minimum quantity of fasteners required, with half of the tabulated quantity at each end of the connection.

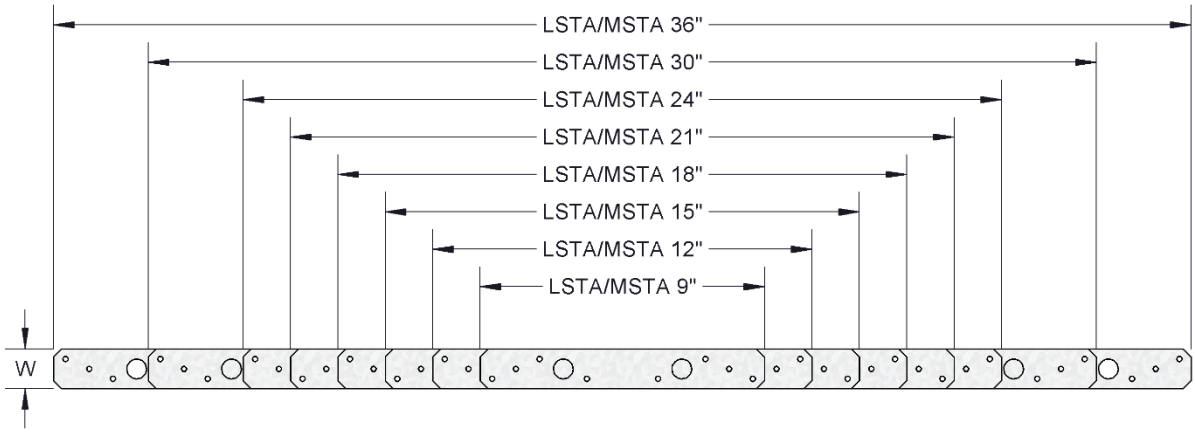

FIGURE 17—LSTA AND MSTA STRAP TIES

TABLE 18—ML ANGLE CONNECTOR ALLOWABLE LOADS

STOCK NO.	STEEL GAGE	FASTENER SCHEDULE[1]				ALLOWABLE LOADS[2,3]			
		Header		Joist		DF-L / SP			
		Qty	Size	Qty	Size	C_D = 1.0	C_D = 1.15	C_D = 1.25	C_D = 1.6
ML24-TZ	12	3	WS15	3	WS15	655	655	655	655
ML26-TZ	12	4	WS15	4	WS15	920	1,060	1,090	1,090

For **SI:** 1 inch = 25.4 mm, 1 lb = 4.45 N.

[1]WS15 Wood Screws (ESR-2761) are $^1/_4$-inch-diameter by $1^1/_2$ inches long and shipped with ML angles.
[2]Allowable loads have been adjusted for a load duration factor, C_D, as shown, in accordance with the NDS. The allowable loads do not apply to loads of other durations, and are not permitted to be adjusted for other load durations. See Sections 4.1 and 4.2 for design and installation requirements.
[3]Allowable loads are for installations in wood members complying with Section 3.29.2.

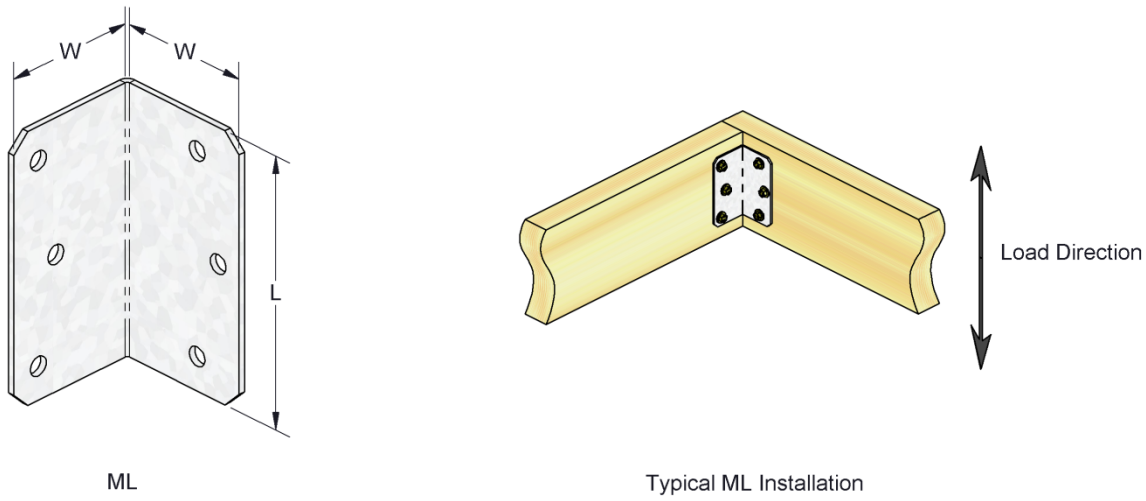

FIGURE 18—ML ANGLE CONNECTOR AND TYPICAL INSTALLATION DETAIL

TABLE 19—MP FRAMING ANGLE ALLOWABLE LOADS[1,2,3,4,5]

STOCK NO.	STEEL GAGE	DIMENSIONS (in.)		FASTENER SCHEDULE				ALLOWABLE LOADS (lbs)							
				Header		Joist		SG = 0.42				SG = 0.50			
		W	L	Qty.	Type	Qty.	Type	C_D = 1.0	C_D = 1.15	C_D = 1.25	C_D = 1.6	C_D = 1.0	C_D = 1.15	C_D = 1.25	C_D = 1.6
MP3	18	$2^1/_4$	$3^3/_8$	3	10d x $1^1/_2$	3	10d x $1^1/_2$	310	330	330	330	360	390	390	390
				3	10d Com.		10d Com.	310	350	380	380	360	410	445	455
MP5	18	$2^1/_4$	$4^5/_8$	4	10d x $1^1/_2$	4	10d x $1^1/_2$	410	470	500	500	480	545	590	595
				4	10d Com.		10d Com.	410	470	505	640	480	545	590	740
MP7	18	$2^1/_4$	$5^7/_8$	5	10d x $1^1/_2$	5	10d x $1^1/_2$	515	585	630	670	600	685	740	795
				5	10d Com.		10d Com.	515	585	630	800	600	685	740	930
MP9	18	$2^1/_4$	$6^7/_8$	6	10d x $1^1/_2$	6	10d x $1^1/_2$	620	705	760	805	720	820	885	960
				6	10d Com.		10d Com.	620	705	760	960	720	820	885	1,115

For **SI:** 1 inch = 25.4 mm, 1 lb = 4.45 N.

[1]Allowable loads have been adjusted for load duration factors, C_D, as shown, in accordance with the NDS. The allowable loads do not apply to loads of other durations, and are not permitted to be adjusted for other load durations. See Sections 4.1 and 4.2 for additional design and installation requirements.

[2]Allowable loads shown are for installations in wood members complying with Section 3.29.2, except that the MP framing angle may be attached to wood members having a minimum specific gravity of either 0.42 or 0.50, as shown.

[3]See Section 3.29.3 for required fastener dimensions and mechanical properties.

[4]MP framing angles are manufactured at a 100-degree angle, and are permitted to be adjusted one time to an angle between 45 and 180 degrees (flat), as depicted in Figure 19.

[5]Tabulated allowable loads are for a single connector. When using a single angle, the joist must be constrained to provide fixity against rotation.

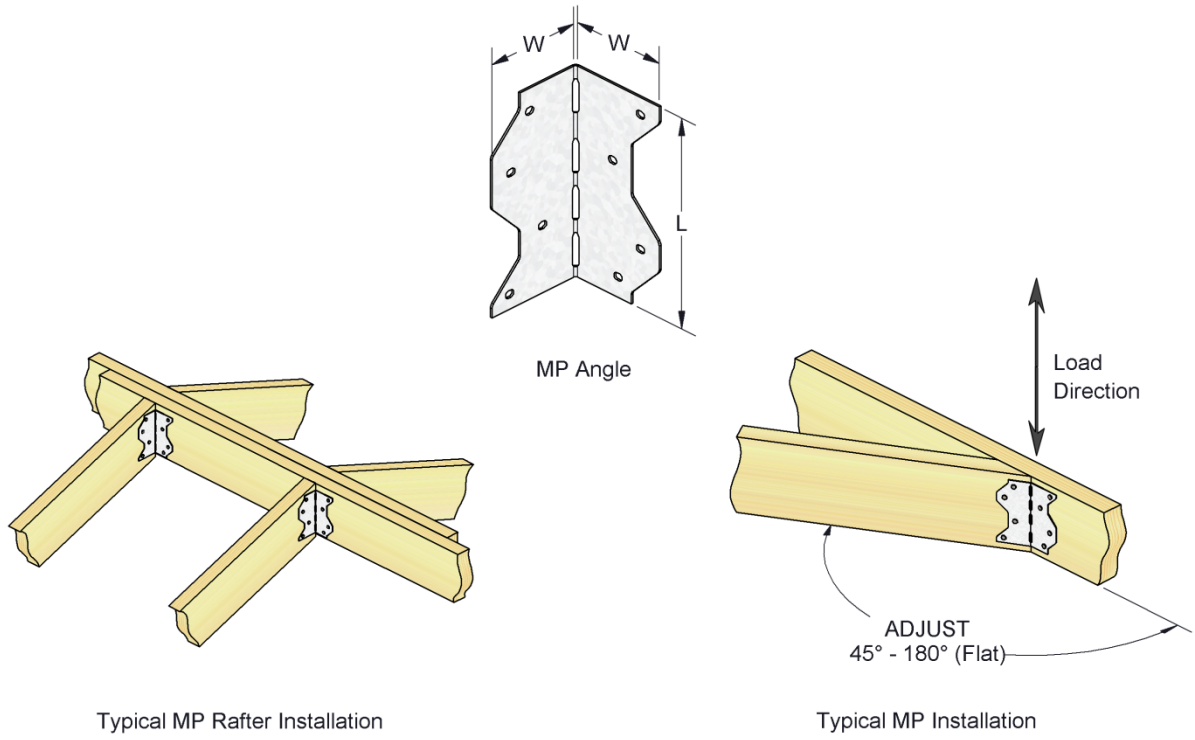

FIGURE 19—MP FRAMING ANGLE

TABLE 20—MP MULTI-PURPOSE FRAMING ANGLES ALLOWABLE LOADS[1,2,3,4,5,6]

STOCK NO.	STEEL GAGE	INSTALL. CONFIG	FASTENER SCHEDULE				ALLOWABLE LOADS (lbs)				
			Header/Stud		Joist/Plate		Load Dir.	C_D = 1.0	C_D = 1.15	C_D = 1.25	C_D = 1.6
			Qty	Type	Qty	Type					
Installed in wood with a specific gravity of 0.50 or greater											
MP34	18	5	4	8d x $1^1/_2$	4	8d x $1^1/_2$	F_1	400	455	490	525
							F_2	400	455	490	590
							F_3	185	215	230	295
MPA1	18	1	6	8d x $1^1/_2$	6	8d x $1^1/_2$	F_1	600	615	615	615
							F_2	600	685	735	750
							F_3	280	320	350	435
		2	6	8d x $1^1/_2$	3	8d x $1^1/_2$	A_1	300	340	370	370
							B_1	300	340	370	385
							C_1	255	255	255	255
		3	6	8d x $1^1/_2$	6	8d x $1^1/_2$	A_2	440	440	440	440
							B_2	240	240	240	240
							C_2	330	330	330	330
MPA1		4	6	8d x $1^1/_2$	2	8d x $1^1/_2$	F_1	200	210	210	210
Installed in wood with a specific gravity from 0.42 to 0.49											
MP34	18	5	4	8d x $1^1/_2$	4	8d x $1^1/_2$	F_1	345	390	420	440
							F_2	345	390	420	495
							F_3	120	140	150	190
MPA1	18	1	6	8d x $1^1/_2$	6	8d x $1^1/_2$	F_1	515	515	515	515
							F_2	515	585	630	630
							F_3	180	205	225	290
		2	6	8d x $1^1/_2$	3	8d x $1^1/_2$	A_1	260	295	310	310
							B_1	260	295	315	325
							C_1	215	215	215	215
		3	6	8d x $1^1/_2$	6	8d x $1^1/_2$	A_2	350	370	370	370
							B_2	200	200	200	200
							C_2	280	280	280	280
MPA1	18	4	6	8d x $1^1/_2$	2	8d x $1^1/_2$	F_1	170	180	180	180

For **SI:** 1 inch = 25.4 mm, 1 lb = 4.45 N.

[1]Allowable loads have been adjusted for load duration factors, C_D, as shown, in accordance with the NDS. The allowable loads do not apply to loads of other durations, and are not permitted to be adjusted for other load durations. See Sections 4.1 and 4.2 for additional design and installations requirements.

[2]See Section 3.29.3 for required fastener dimensions and mechanical properties.

[3]Allowable loads shown are for installations in wood members complying with Section 3.29.2.

[4]Refer to drawings below for illustrations of each load direction. The "F_3" load direction is that which results in a withdrawal load on either the joist nails or the header nails

[5]Tabulated allowable loads are for a single connector. When using a single angle, the joist must be constrained to provide fixity against rotation.

[6]Some illustrations for the MP show connection that could cause cross-grain tension or bending of the wood during loading if not reinforced sufficiently. In such cases, mechanical reinforcement should be considered.

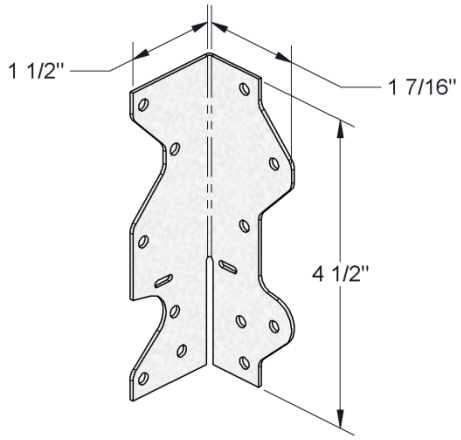

MPA1

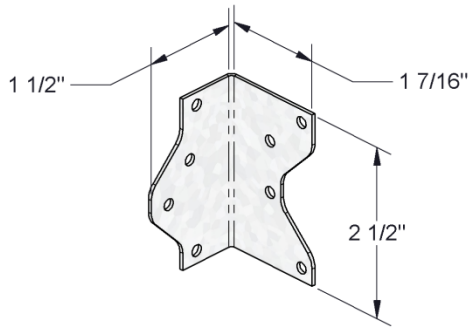

MP34

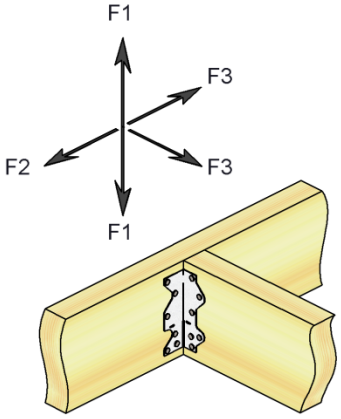

Typical MPA1
Joist/Header Installation
(Figure 1)

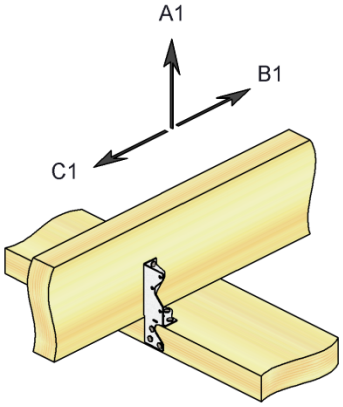

Typical MPA1
Rafter/Plate Installation
(Figure 2)

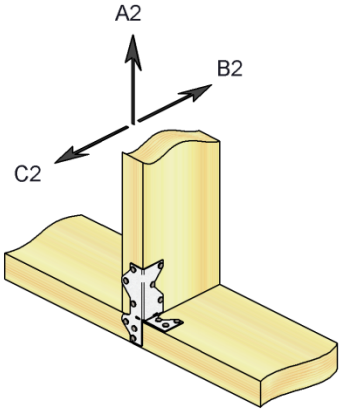

Typical MPA1
Stud/Plate Installation
(Figure 3)

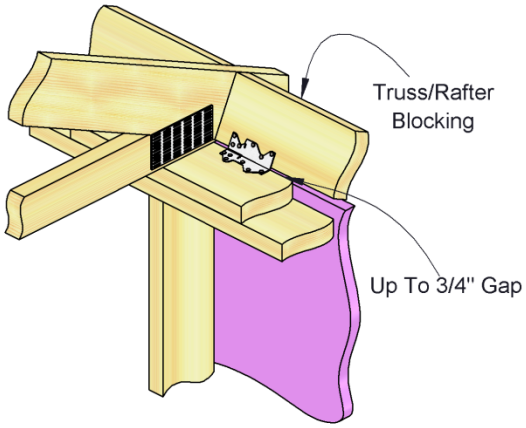

Typical MPA1
1" Foamboard Installation
(Figure 4)

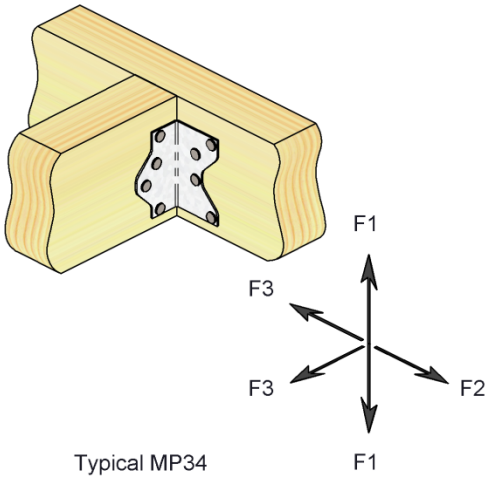

Typical MP34
Joist/Header Installation
(Figure 5)

FIGURE 20—MP MULTI-PURPOSE FRAMING ANGLE

TABLE 21—MP_F MULTI-LATERAL PLATE TIE ALLOWABLE LOADS[1,2,3,6]

STOCK NO.	STEEL GAGE	DIMENSIONS (inches)		INSTALL. CONFIG.[4]	FASTENERS				DIR. OF LOAD[5]	ALLOWABLE LOADS (lbs)			
					Header/Stud		Joist/Plate						
		W	L		Qty	Type	Qty	Type		C_D = 1.0	C_D = 1.15	C_D = 1.25	C_D = 1.6
Installed in wood with a specific gravity of 0.50 or greater													
MP4F	20	3	$4^1/_4$	Type 1	6	8d x $1^1/_2$	6	8d x $1^1/_2$	V	590	670	720	750
									H	590	670	720	750
				Type 2	6	8d x $1^1/_2$	6	8d x $1^1/_2$	V	590	670	720	750
									H	585	585	585	585
				Type 1	6	8d Common	6	8d Common	V	590	670	720	750
									H	590	670	720	750
				Type 2	6	8d Common	6	8d Common	V	590	670	720	750
									H	585	585	585	585
MP6F	20	$3^3/_4$	$4^1/_4$	Type 1	6	8d x $1^1/_2$	6	8d x $1^1/_2$	V	590	595	595	595
									H	590	595	595	595
				Type 2	6	8d x $1^1/_2$	6	8d x $1^1/_2$	V	590	595	595	595
									H	590	595	595	595
				Type 1	6	8d Common	6	8d Common	V	590	595	595	595
									H	590	595	595	595
				Type 2	6	8d Common	6	8d Common	V	590	595	595	595
									H	590	595	595	595
Installed in wood with a specific gravity from 0.42 to 0.49													
MP4F	20	3	$4^1/_4$	Type 1	6	8d x $1^1/_2$	6	8d x $1^1/_2$	V	505	575	615	645
									H	505	575	615	645
				Type 2	6	8d x $1^1/_2$	6	8d x $1^1/_2$	V	505	575	615	645
									H	500	500	500	500
				Type 1	6	8d Common	6	8d Common	V	505	575	615	645
									H	505	575	615	645
				Type 2	6	8d Common	6	8d Common	V	505	575	615	645
									H	500	500	500	500
MP6F	20	$3^3/_4$	$4^1/_4$	Type 1	6	8d x $1^1/_2$	6	8d x $1^1/_2$	V	505	510	510	510
									H	505	510	510	510
				Type 2	6	8d x $1^1/_2$	6	8d x $1^1/_2$	V	505	510	510	510
									H	505	510	510	510
				Type 1	6	8d Common	6	8d Common	V	505	510	510	510
									H	505	510	510	510
				Type 2	6	8d Common	6	8d Common	V	505	510	510	510
									H	505	510	510	510

For **SI:** 1 inch = 25.4 mm, 1 lb = 4.45 N.

[1]Allowable loads have been adjusted for load duration factors, C_D, as shown, in accordance with the NDS. The allowable loads do not apply to loads of other durations, and are not permitted to be adjusted for other load durations. See Sections 4.1 and 4.2 for additional design and installation requirements.

[2]Allowable loads shown are for installations in wood members complying with Section 3.29.2.

[3]See Section 3.29.3 for required fastener dimensions and mechanical properties.

[4]See Figure 21 for depiction of installation configurations.

[5]For direction of load: 'V' indicates a vertical (uplift) load; 'H' indicates a horizontal (shear) load within the plane of the MP_F plate.

[6]The MP_F may be installed over wood-based structural sheathing (as shown in Figure 21) having a maximum thickness of $^1/_2$ inch (12.7 mm) without adversely affecting the tabulated allowable loads.

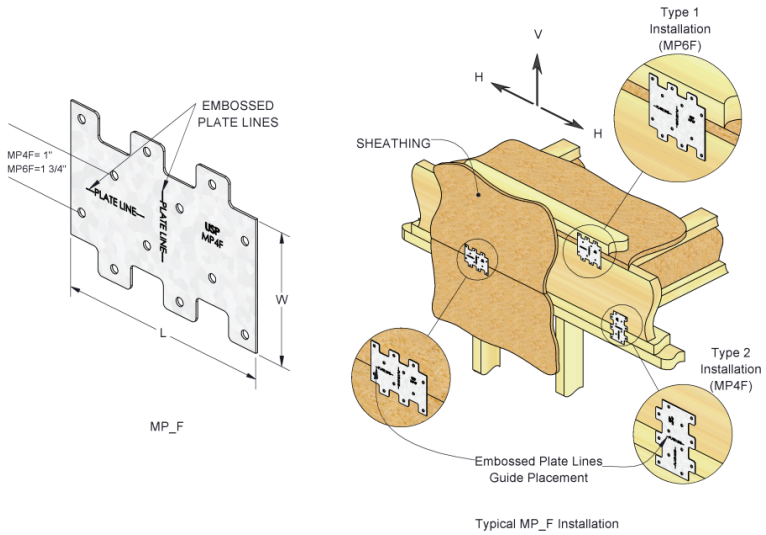

FIGURE 21—MP_F MULTI-LATERAL PLATE TIE

TABLE 22—RBC ROOF BOUNDARY CLIP

STOCK NO.	STEEL GAGE	DIMENSIONS (in.)		FASTENER SCHEDULE				ALLOWABLE LOADS (lbs)[1,2,3,4]			
				Top Plate		Blocking		Load Direction: F1			
		W	H	Qty	Type	Qty	Type	C_D = 1.0	C_D = 1.15	C_D = 1.25	C_D = 1.6
RBC	20	$4^1/_2$	6	6	10dx$1^1/_2$	6	10dx$1^1/_2$	505	505	505	505

For **SI:** 1 inch = 25.4 mm, 1 lbf = 4.45 N, 1 psi = 6.895 kPa.

[1]Allowable loads have been adjusted for load duration factors, C_D, as shown, in accordance with the NDS. The allowable loads do not apply to loads of other durations and are not permitted to be adjusted for other load durations. See Sections 4.1 and 4.2 for additional design and installations requirements.

[2]Allowable loads shown are for installations in wood members complying with Section 3.29.2 and are based on the use of wood members with a reference compression perpendicular to grain design value, $F_{c\text{-}perp}$, of 625 psi or greater.

[3]See Section 3.29.3 for required fastener dimensions and mechanical properties.

[4]Refer to Figure 22 for installation configurations.

[5]RBC is field adjustable from 0° to 45°. Bend angle only once.

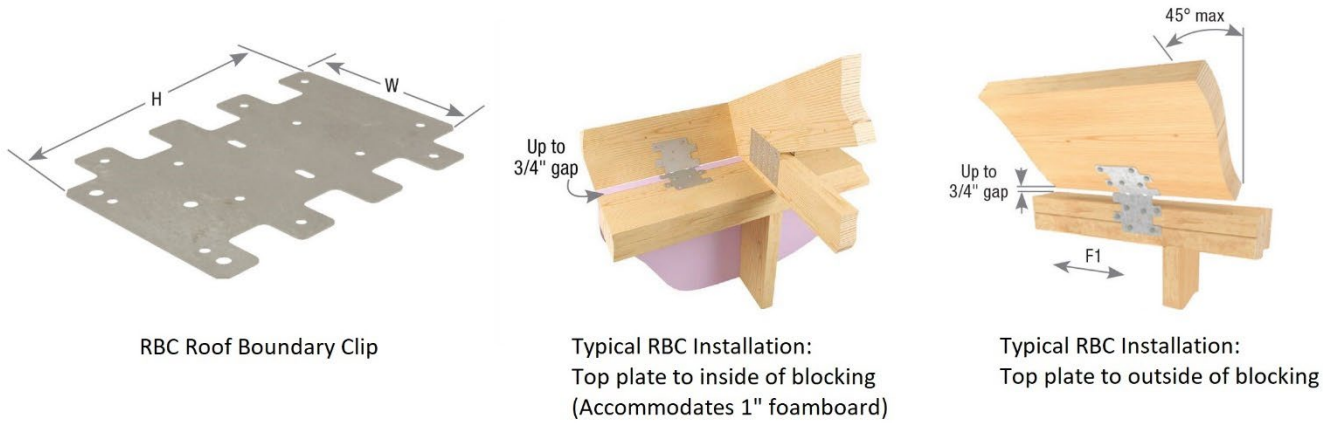

FIGURE 22—RBC ROOF BOUNDARY CLIP

TABLE 23—RS COILED STRAPPING ALLOWABLE LOADS[1,2,3,4]

STOCK NO.	STEEL GAGE	DIMENSIONS		SG = 0.42				SG = 0.50				ALLOWABLE TENSION LOADS (lbs)
				REQUIRED LENGTH (in)		FASTENER SCHEDULE		REQUIRED LENGTH (in)		FASTENER SCHEDULE		
		W (in)	Coil Length	Cut Length	End Length	Min Qty	Type	Cut Length	End Length	Min Qty	Type	C_D = 1.6
RS22-R	22	1 1/4	25'	Clear Span + 14″	7"	16	10d Com.	Clear Span + 12″	6″	12	10d Com.	925
				Clear Span + 16″	8"	18	8d Com.	Clear Span + 12″	6″	14	8d Com.	
RS300	22	1 1/4	300'	Clear Span + 14″	7"	16	10d Com.	Clear Span + 12″	6″	12	10d Com.	925
				Clear Span + 16″	8"	18	8d Com.	Clear Span + 12″	6″	14	8d Com.	
RS20-R	20	1 1/4	25'	Clear Span + 16″	8"	18	10d Com.	Clear Span + 12″	6″	14	10d Com.	1,045
				Clear Span + 18″	9"	20	8d Com.	Clear Span + 14″	7″	16	8d Com.	
RS250	20	1 1/4	250'	Clear Span + 16″	8"	18	10d Com.	Clear Span + 12″	6″	14	10d Com.	1,045
				Clear Span + 18″	9"	20	8d Com.	Clear Span + 14″	7″	16	8d Com.	
RS100	18	1 1/4	100'	Clear Span + 18″	9"	22	10d Com.	Clear Span + 16″	8″	18	10d Com.	1,375
				Clear Span + 22″	11"	26	8d Com.	Clear Span + 18″	9″	22	8d Com.	
RS18-R	18	1 1/4	25'	Clear Span + 18″	9"	22	10d Com.	Clear Span + 16″	8″	18	10d Com.	1,375
				Clear Span + 22″	11"	26	8d Com.	Clear Span + 18″	9″	22	8d Com.	
RS200	18	1 1/4	200'	Clear Span + 18″	9"	22	10d Com.	Clear Span + 16″	8″	18	10d Com.	1,375
				Clear Span + 22″	11"	26	8d Com.	Clear Span + 18″	9″	22	8d Com.	
RS150	16	1 1/4	150'	Clear Span + 24″	12"	28	10d Com.	Clear Span + 18″	9″	22	10d Com.	1,730
				Clear Span + 26″	13"	32	8d Com.	Clear Span + 22″	11″	26	8d Com.	
RS16-R	16	1 1/4	25'	Clear Span + 24″	12"	28	10d Com.	Clear Span + 18″	9″	22	10d Com.	1,730
				Clear Span + 26″	13"	32	8d Com.	Clear Span + 22″	11″	26	8d Com.	
RS14-100	14	1 1/4	100'	Clear Span + 30"	15"	36	10d Com.	Clear Span + 24"	12"	28	10d Com.	2,610
				Clear Span + 34"	17"	42	8d Com.	Clear Span + 28"	14"	34	8d Com.	
RS14-R	14	1 1/4	25'	Clear Span + 30"	15"	36	10d Com.	Clear Span + 24"	12"	28	10d Com.	2,610
				Clear Span + 34"	17"	42	8d Com.	Clear Span + 28"	14"	34	8d Com.	

For **SI:** 1 inch = 25.4 mm, 1 lb = 4.45 N.

[1]Allowable loads have been adjusted for a load duration factor, C_D, of 1.6, corresponding to a ten minute load duration (i.e., wind or earthquake loading), in accordance with the NDS. The allowable loads do not apply to loads of other durations, and are not permitted to be adjusted for other load durations. See Sections 4.1 and 4.2 for additional design and installation requirements.

[2]Allowable loads shown are for installations in wood members complying with Section 3.29.2, except that RS coiled strapping may be attached to wood members having a minimum specific gravity of either 0.42 or 0.50, as shown.

[3]See Section 3.29.3 for required fastener dimensions and mechanical properties.

[4]Half of the required number of fasteners must be installed at each end of the connection.

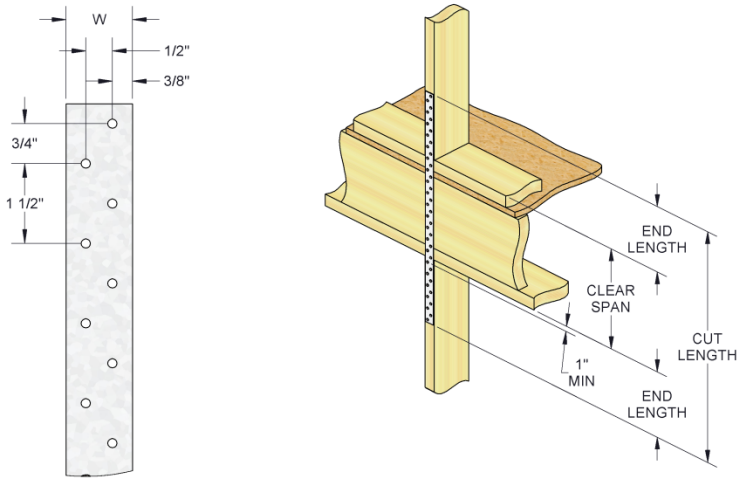

RS

Typical RS Rim Joist Installation

FIGURE 23—RS COILED STRAPPING

TABLE 24—RSPT STUD PLATE TIE ALLOWABLE LOADS[1,2,3,4,5,6]

STOCK NO.	STEEL GAGE	DIMENSIONS (in.)		FASTENER SCHDULE				ALLOWABLE LOADS (lbs)		
				Stud		Plate		Uplift	Lateral F_1	Lateral F_2
		W	H	Qty	Type	Qty	Type	C_D = 1.6	C_D = 1.6	C_D = 1.6
RSPT4	20	$1^1/_2$	$4^1/_8$	4	8d x $1^1/_2$	4	8d x $1^1/_2$	460	255	300
RSPT6	18	$1^1/_2$	$5^7/_{16}$	4	10d x $1^1/_2$	4	10d x $1^1/_2$	650	--	--
RSPT6-2	18	$2^3/_4$	$5^7/_{16}$	8	10d x $1^1/_2$	6	10d x $1^1/_2$	900	--	--

For **SI:** 1 inch = 25.4 mm, 1 lb = 4.45 N.

[1]Allowable loads have been adjusted for a load duration factor, C_D, of 1.6, corresponding to a ten-minute load duration (i.e., wind or earthquake loading), in accordance with the NDS. The allowable loads do not apply to loads of other durations, and are not permitted to be adjusted for other load durations. See Sections 4.1 and 4.2 for additional design and installation requirements.

[2]Allowable loads shown are for installations in wood members complying with Section 3.29.2.

[3]See Section 3.29.3 for required fastener dimensions and mechanical properties.

[4]The 'Lateral F_1' load direction is for lateral loading within the plane of the wall. The 'Lateral F_2' load direction is for lateral loading perpendicular to the plane of the wall.

[5]Tabulated allowable loads are for a single connector. RSPT connectors should be installed in pairs at opposite sides of the stud to reduce eccentricity.

[6]Nails into pressure-treated bottom / sill plates must have a level of corrosion resistance that is compatible with the preservative treatment. See Section 3.29.4 of this report.

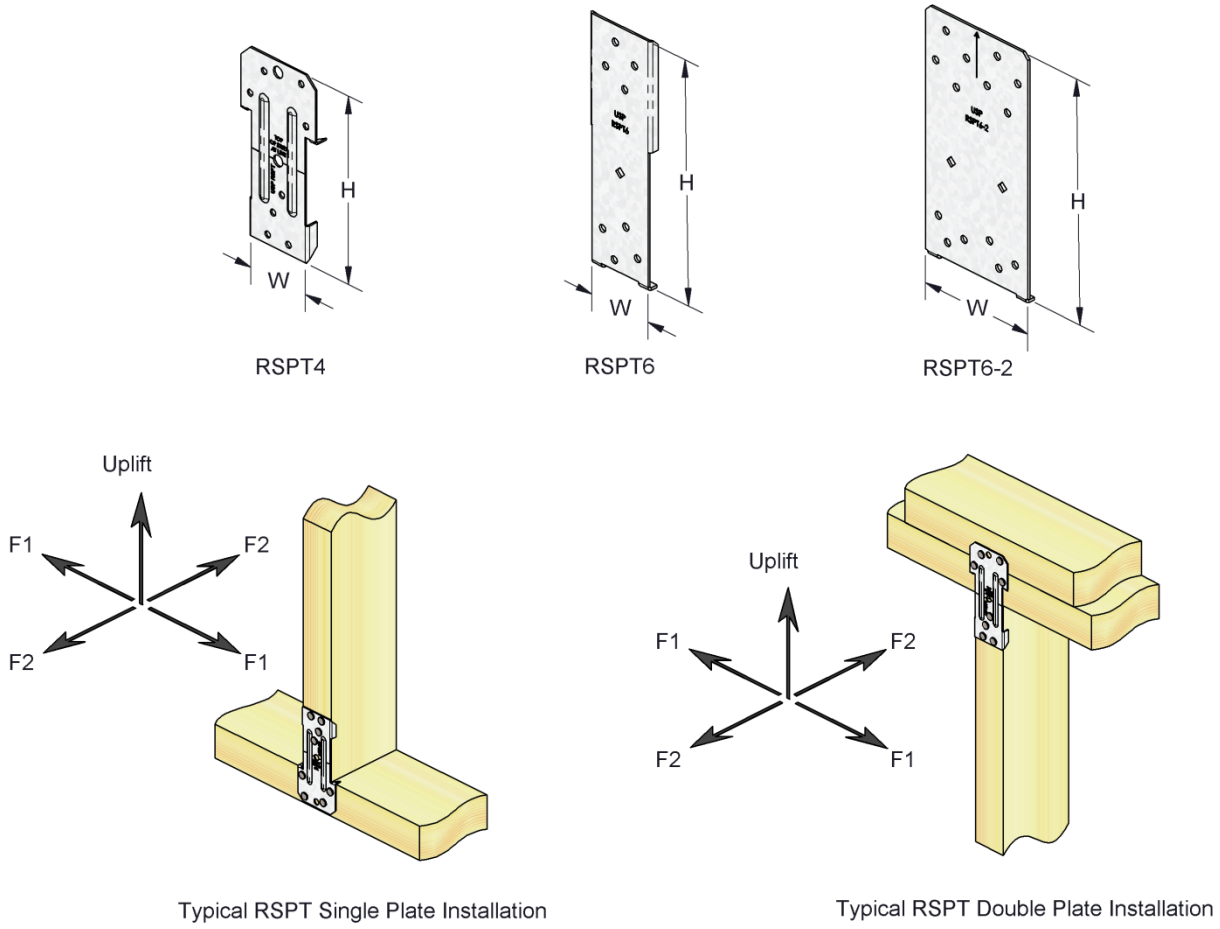

FIGURE 24—RSPT STUD PLATE TIE

TABLE 25—SPT22, SPT24, SPT44 STUD-PLATE TIE ALLOWABLE LOADS[1,2,3,4,5]

STOCK NO.	STEEL GAGE	DIMENSIONS (in)			FASTENERS SCHEDULE				ALLOWABLE LOADS (lbs)		
		W	H	L	Stud		Plate		Uplift	F_1	F_2
					Qty	Type	Qty	Type	C_D=1.6	C_D=1.6	C_D=1.6
SPT22	20	$1^9/_{16}$	$4^3/_8$	$3^1/_2$	4	10d Common	4	10d Common	735	535	275
SPT24	20	$1^9/_{16}$	$5^5/_8$	$3^1/_2$	6	10d Common	6	10d Common	1,090	535	275
SPT44	20	$3^9/_{16}$	$6^3/_4$	$6^1/_2$	6	16d Common	6	16d Common	1,315	845	275

For **SI:** 1 inch = 25.4 mm, 1 lb = 4.45 N.

[1]Allowable loads have been adjusted for a load duration factor, C_D, of 1.6, corresponding to a ten minute load duration (i.e., wind or earthquake loading), in accordance with the NDS. The allowable loads do not apply to loads of other durations, and are not permitted to be adjusted for other load durations. See Sections 4.1 and 4.2 for additional design and installation requirements.

[2]Allowable loads shown are for installations in wood members complying with Section 3.29.2.

[3]See Section 3.29.3 for required fastener dimensions and mechanical properties.

[4]The two nails fastened to the wide face of the stud must be driven 30º from the perpendicular on the horizontal plane.

[5]The allowable loads are for a single SPT device per connection. If two SPT devices are used for a single connection (with one on either side of the framing), allowable loads may be doubled.

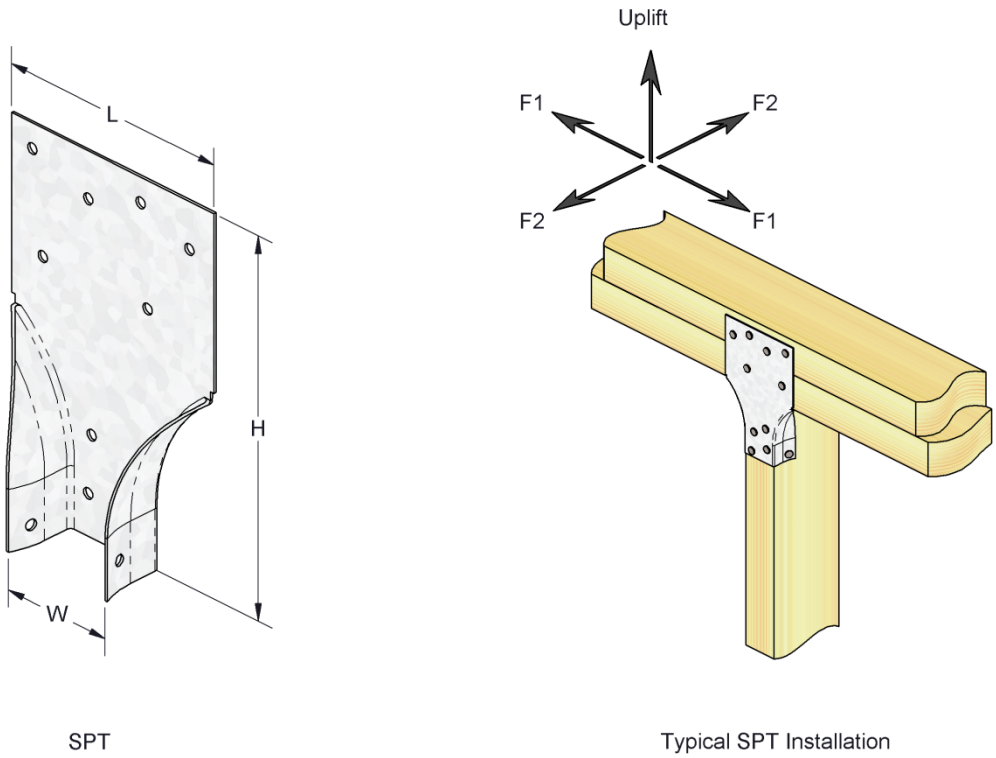

FIGURE 25—SPT22, SPT24 AND SPT44 STUD-PLATE TIE

TABLE 26—SPT, SPTH AND SPTHW STUD PLATE TIE ALLOWABLE LOADS[1,2,3]

STOCK NO.	STEEL GAGE	DIMENSIONS (in.)		FASTENER SCHEDULE		ALLOWABLE UPLIFT LOADS (lbs.)
		W	H	Qty	Type	C_D = 1.6
SPT4	20	$3^9/_{16}$	$6^7/_8$	6	10d x $1^1/_2$	875
SPT6	20	$5^9/_{16}$	$7^5/_8$	6	10d x $1^1/_2$	875
SPT8	20	$7^5/_{16}$	$8^1/_2$	6	10d x $1^1/_2$	875
SPTH4	18	$3^9/_{16}$	$8^5/_8$	12	10d x $1^1/_2$	2,195
SPTH6	18	$5^9/_{16}$	$9^3/_8$	12	10d x $1^1/_2$	2,195
SPTH8	18	$7^5/_{16}$	$8^1/_2$	12	10d x $1^1/_2$	2,195
SPTHW4	18	$4^1/_{16}$	$8^3/_8$	12	10d x $1^1/_2$	2,195
SPTHW6	18	$6^1/_{16}$	$9^1/_8$	12	10d x $1^1/_2$	2,195

For **SI:** 1 inch = 25.4 mm, 1 lb = 4.45 N, 1 psi = 6,895 Pa.

[1]Allowable loads have been adjusted for a load duration factor, C_D, of 1.6, corresponding to a ten-minute load duration (i.e., wind or earthquake loading), in accordance with the NDS. The allowable loads do not apply to loads of other durations, and are not permitted to be adjusted for other load durations. See Sections 4.1 and 4.2 additional design and installation requirements.

[2]Allowable loads shown are for installations in wood members complying with Section 3.29.2. Wood sill plates must also have a minimum reference compression perpendicular to grain design value, $F_{c\text{-}perp}$, of 625 psi (4.31 MPa).

[3]See Section 3.29.3 for required fastener dimensions and mechanical properties.

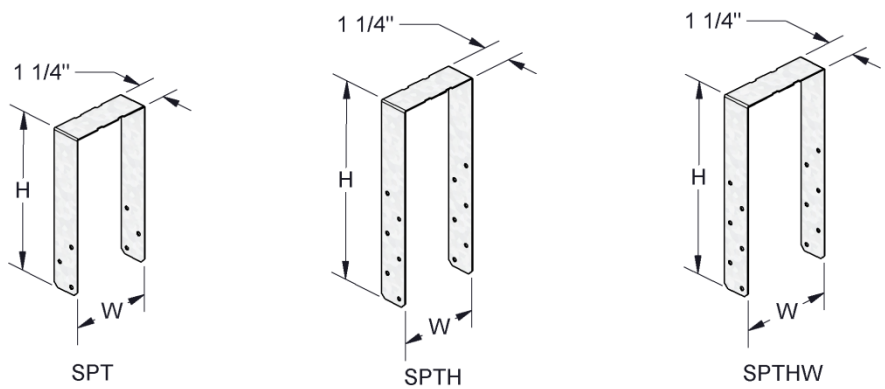

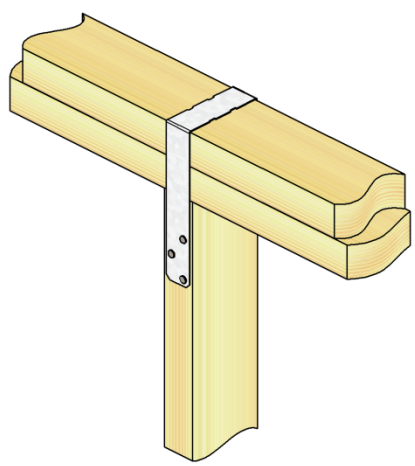

Typical SPT Installation
(SPTW, SPTH & SPTHW Similar)

FIGURE 26—SPT, SPTH AND SPTHW STUD PLATE TIES

TABLE 27—SRC/SRCP SILL RETROFIT CONNECTOR ALLOWABLE LOADS (lbs)[1]

STOCK NO.	STEEL GA.	FASTENER SCHEDULE				F_1 PARALLEL TO SILL	F_2 PERPENDICULAR TO SILL
		SILL PLATE		CONCRETE FOUNDATION[4,5]		C_D = 1.6	C_D = 1.6
		Qty	Type	Qty	Dia. (in.)		
SRC	12	5	WS6[2]	2	½	1,405	-
SRCP	10	5	WS3[3]	2	½	1,560	360

For **SI:** 1 inch = 25.4 mm, 1 lb = 4.45 N.

[1]Allowable loads have been adjusted for a load duration factor, C_D, as shown, in accordance with the NDS. The allowable loads do not apply to loads of other durations, and are not permitted to be adjusted for other load durations. See Sections 4.1 and 4.2 for design and installation requirements.

[2]Allowable F_1 loads are for installations in wood members complying with Section 3.29.2.

[3] WS6 Wood Screws (ESR-2761) are ¼ inch in diameter and 6 inches long and are shipped with each SRC connector.

[3] WS3 Wood Screws (ESR-2761) are ¼ inch in diameter and 3 inches long and are shipped with each SRCP connector.

[4]Concrete anchors are ½-inch-diameter DeWalt Power-Stud+ SD2 (ESR-2502) carbon steel anchors with minimum 3 inches embedment or equivalent.

[5]The minimum concrete compressive strength, f'_c = 2,500 psi.

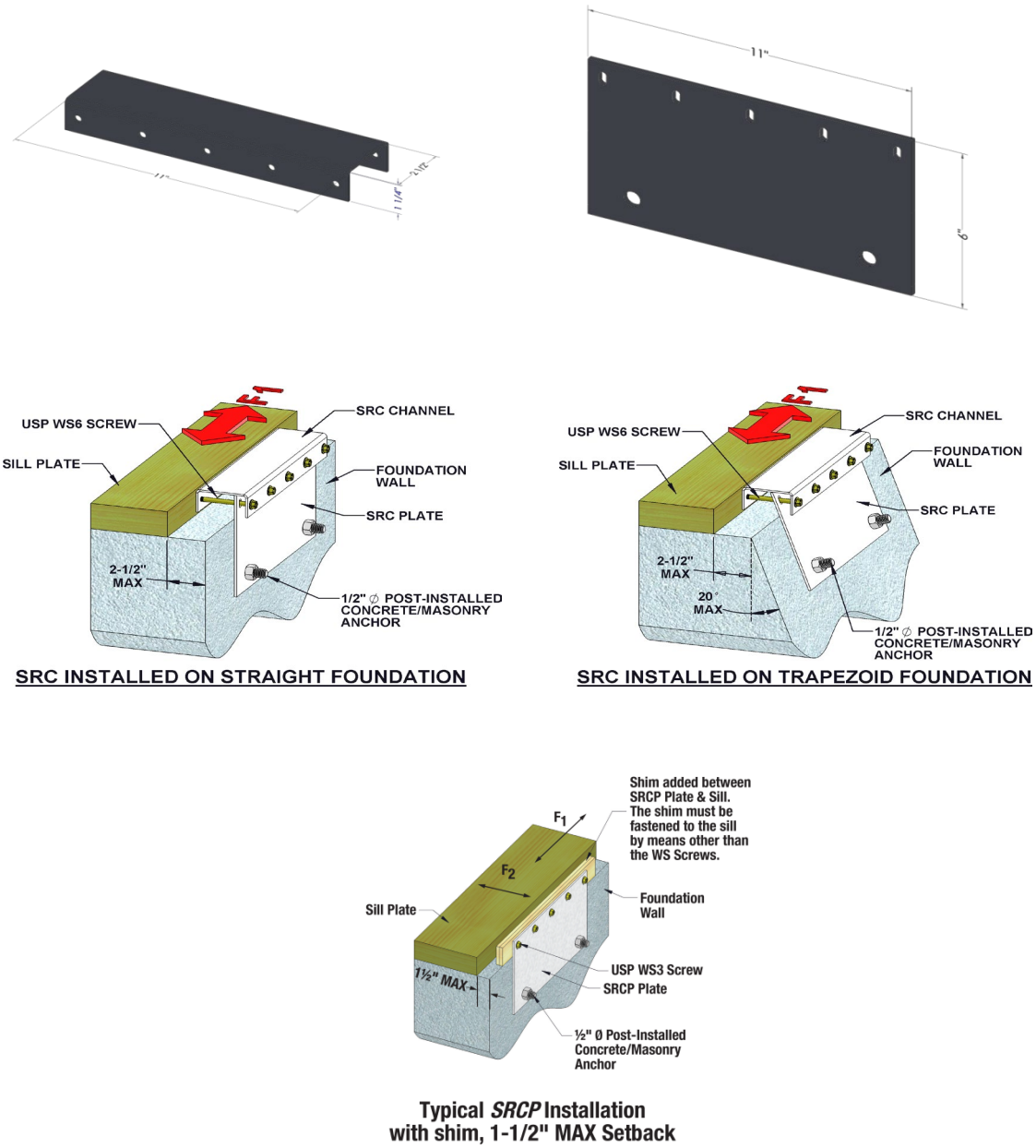

FIGURE 27—SRC/SRCP SILL RETROFIT CONNECTOR AND TYPICAL INSTALLATION DETAILS

TABLE 28—ST STRAP TIE ALLOWABLE LOADS[1,2,3,4]

STOCK NO.	STEEL GAGE	DIMENSIONS (inches)		FASTENER SCHEDULE		ALLOWABLE LOADS (lbs)	
						SG = 0.42	SG = 0.50
		W	L	Qty.	Type	C_D = 1.6	C_D = 1.6
ST9	16	$1^1/_4$	9	8	16d Common	775	895
ST12	16	$1^1/_4$	$11^5/_8$	10	16d Common	970	1,120
ST18	16	$1^1/_4$	$17^3/_4$	14	16d Common	1,355	1,570
ST22	16	$1^1/_4$	$21^5/_8$	18	16d Common	1,705	1,705

For **SI:** 1 inch = 25.4 mm, 1 lb = 4.45 N.

[1]Allowable loads have been adjusted for a load duration factor, C_D, of 1.6, corresponding to a ten minute load duration (i.e., wind or earthquake loading), in accordance with the NDS. The allowable loads do not apply to loads of other durations, and are not permitted to be adjusted for other load durations. See Sections 4.1 and 4.2 for additional design and installation requirements.

[2]Allowable loads shown are for installations in wood members complying with Section 3.29.2, except that the ST strap tie may be attached to wood members having a minimum specific gravity of either 0.42 or 0.50, as shown.

[3]See Section 3.29.3 for required fastener dimensions and mechanical properties.

[4]Half of the required number of fasteners must be installed at each end of the connection.

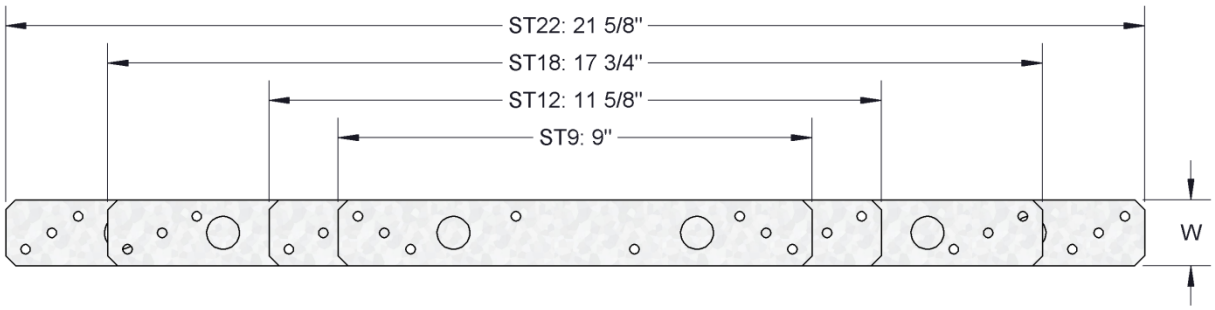

FIGURE 28—ST STRAP TIE

TABLE 29—STEEL TYPE, STRENGTH AND CORROSION RESISTANCE

Product	Steel	Coating
A Framing Angle	ASTM A653, SS designation, Grade 40	G90[1], G185[1]
AC Framing Angle	ASTM A653, SS designation, Grade 40	G90[1], G185[1]
B Corner Brace	ASTM A653, SS designation, Grade 40	G90[1]
BL Corner Brace	ASTM A653, SS designation, Grade 40	G90[1]
CMST Coil Strap	ASTM A653, SS designation, Grade 50, Class 1	G90[1]
CMSTC Strap Tie	ASTM A653, SS designation, Grade 50, Class 1	G90[1]
CSH-TZ Concealed Stringer Hanger	ASTM A653, SS designation, Grade 40	G185[1]
FWAN Foundation Wall Angle	ASTM A653, SS designation, Grade 40	G185[1]
HH Header Hanger	ASTM A653, SS designation, Grade 40	G90[1]
HTW Twist Strap Tie	ASTM A653, SS designation, Grade 40	G90[1], G185[1]
JA Joist Angle	ASTM A653, SS designation, Grade 40	G90[1], G185[1]
KHSA Connector Strap	ASTM A36	Painted
KHST Strap Tie	7 Gage material: ASTM A1011, SS designation, Grade 40; 3 Gage material: ASTM A36	Painted
KSA Connector Strap	ASTM A653, SS designation, Grade 40	G90[1]
KRPS Strap Tie	ASTM A653, SS designation, Grade 40	G90[1]
KST, KSTI and LSTI Strap Ties	No. 20, 16 and 14 Ga. Material: ASTM A653, SS designation, Grade 50 No. 18, 12 and 10 Ga. Material: ASTM A653, SS designation; Grade 40	G90[1]
KVB / KVBI Knee Brace	ASTM A653, SS designation, Grade 40	G90[1]
LFTA Strap Tie	ASTM A653, SS designation, Grade 40	G90[1], G185[1]
LSTA Strap Tie	ASTM A653, SS designation, Grade 50, Class 1	G90[1]
LTW Twist Strap Tie	ASTM A653, SS designation, Grade 40	G90[1], G185[1]
ML Angles	ASTM A653, SS designation, Grade 40	G185[1]
MP Framing Angle	ASTM A653, SS designation, Grade 40	G90[1], G185[1]
MP34 Multi-Purpose Framing Angle	ASTM A653, SS designation, Grade 40	G90[1], G185[1]
MPA Multi-Purpose Framing Angle	ASTM A653, SS designation, Grade 40	G90[1], G185[1]
MP_F Multi-Lateral Plate Tie	ASTM A653, SS designation, Grade 40	G90[1], G185[1]
MSTA Strap Tie	ASTM A653, SS designation, Grade 50, Class 1	G90[1], G185[1]
MSTC Strap Tie	ASTM A653, SS designation, Grade 50, Class 1	G90[1]
MTW Twist Strap Tie	ASTM A653, SS designation, Grade 40	G90[1], G185[1]
RBC Roof Boundary Clip	ASTM A653, SS designation, Grade 40	G90[1]
RS Coiled Strapping	No. 22, 20, 18 and 16 Ga. Material: ASTM A653, SS designation; Grade 40 No. 14 Ga. Material: ASTM A653, SS designation, Grade 50	G90[1], G185[1]
RSPT Stud Plate tie	ASTM A653, SS designation, Grade 40	G90[1], G185[1]
SPT Stud-Plate Tie	ASTM A653, SS designation, Grade 40	G90[1], G185[1]
SPT and SPTH Stud Plate Ties	ASTM A653, SS designation, Grade 40	G90[1], G185[1]
SRC/SRCP Sill Retrofit Connector	ASTM A653, SS designation, Grade 40	G90[1]
ST Strap Tie	ASTM A653, SS designation, Grade 40	G90[1]

[1]Corrosion protection is a zinc coating in accordance with ASTM A653.

DIVISION: 06 00 00—WOOD, PLASTICS, AND COMPOSITES
Section: 06 05 23—Wood, Plastic, and Composite Fastenings

REPORT HOLDER:

MITEK® INC.

EVALUATION SUBJECT:

MITEK® ANGLES, STRAPS, HANGERS AND TIES FOR WOOD FRAMED CONSTRUCTION

1.0 REPORT PURPOSE AND SCOPE

Purpose:

The purpose of this evaluation report supplement is to indicate that the MiTek Angles, Straps, Hangers and Ties for Wood Framed Construction, described in ICC-ES evaluation report ESR-3455, have also been evaluated for compliance with the codes noted below as adopted by the Los Angeles Department of Building and Safety (LADBS).

Applicable code editions:

- 2026 *City of Los Angeles Building Code* (LABC)
- 2026 *City of Los Angeles Residential Code* (LARC)

2.0 CONCLUSIONS

The MiTek Angles, Straps, Hangers and Ties for Wood Framed Construction, described in Sections 2.0 through 7.0 of the evaluation report ESR-3455, comply with the LABC Chapter 23, and the LARC, and are subject to the conditions of use described in this supplement.

3.0 CONDITIONS OF USE

The MiTek Angles, Straps, Hangers and Ties for Wood Framed Construction described in this evaluation report supplement must comply with all of the following conditions:

- All applicable sections in the evaluation report ESR-3455.
- The design, installation, conditions of use and labeling are in accordance with the 2024 *International Building Code*® (IBC) or 2024 *International Residential Code*® (IRC) provisions, as applicable, noted in the evaluation report ESR-3455.
- The design, installation and inspection are in accordance with additional requirements of LABC Chapters 16, 17 and 23, as applicable.
- The supported end of joist or beam must be within $^{1}/_{4}$-inch from the supporting member.
- Solid blocking must be required for all joist hangers and angles supporting roof joists having one end twisted more than one-half degree per foot of length relative to the other end, except as specifically noted in the evaluation report.
- In accordance with LABC Section 2305.5, allowable seismic load values of MiTek straps and ties used as hold-down connectors must be 75 percent of those in the evaluation report ESR-3455.
- Under the LARC, an engineered design in accordance with LARC Section R301.1.3 must be submitted.
- The seismic design provisions for hillside buildings referenced in LABC Section 2301.1 have not been considered and are outside the scope of this supplement.

This supplement expires concurrently with the evaluation report ESR-3455, reissued October 2024 and revised July 2026.

ICC-ES Evaluation Reports are not to be construed as representing aesthetics or any other attributes not specifically addressed, nor are they to be construed as an endorsement of the subject of the report or a recommendation for its use. There is no warranty by ICC Evaluation Service, LLC, express or implied, as to any finding or other matter in this report, or as to any product covered by the report.

Copyright © 2026 ICC Evaluation Service, LLC. All rights reserved.

DIVISION: 06 00 00—WOOD, PLASTICS, AND COMPOSITES
Section: 06 05 23—Wood, Plastic, and Composite Fastenings

REPORT HOLDER:

MITEK® INC.

EVALUATION SUBJECT:

MITEK® ANGLES, STRAPS, HANGERS AND TIES FOR WOOD FRAMED CONSTRUCTION

1.0 REPORT PURPOSE AND SCOPE

Purpose:

The purpose of this evaluation report supplement is to indicate that MiTek Angles, Straps, Hangers and Ties for Wood Framed Construction, described in ICC-ES evaluation report ESR-3455, have also been evaluated for compliance with the code*(s)* noted below.

Applicable code edition*(s)*:

- 2025 *California Building Code* (CBC)

For evaluation of applicable Chapters adopted by the California Office of Statewide Health Planning and Development (OSHPD) AKA: California Department of Health Care Access and Information (HCAI) and the Division of State Architect (DSA), see Sections 2.1.1 and 2.1.2 below.

- 2025 *California Residential Code* (CRC)

2.0 CONCLUSIONS

2.1 CBC:

The MiTek Angles, Straps, Hangers and Ties for Wood Framed Construction, described in Sections 2.0 through 7.0 of the evaluation report ESR-3455, comply with CBC Chapter 23, provided the design and installation are in accordance with the 2024 *International Building Code®* (IBC) provisions noted in the evaluation report and the additional requirements of CBC Chapters 16, 17 and 23, as applicable.

2.1.1 OSHPD:

The applicable OSHPD Sections and Chapters of the CBC are beyond the scope of this supplement.

2.1.2 DSA:

The applicable DSA Sections and Chapters of the CBC are beyond the scope of this supplement.

2.2 CRC:

The MiTek Angles, Straps, Hangers and Ties for Wood Framed Construction, described in Sections 2.0 through 7.0 of the evaluation report ESR-3455, comply with CRC Chapter 3, provided the design and installation are in accordance with the 2024 *International Residential Code®* (IRC) provisions noted in the evaluation report and the additional requirements of CRC Chapter 3, as applicable.

This supplement expires concurrently with the evaluation report, reissued October 2024 and revised July 2026.

ICC-ES Evaluation Reports are not to be construed as representing aesthetics or any other attributes not specifically addressed, nor are they to be construed as an endorsement of the subject of the report or a recommendation for its use. There is no warranty by ICC Evaluation Service, LLC, express or implied, as to any finding or other matter in this report, or as to any product covered by the report.

Copyright © 2026 ICC Evaluation Service, LLC. All rights reserved.

DIVISION: 06 00 00—WOOD, PLASTICS AND COMPOSITES
Section: 06 05 23—Wood, Plastic, and Composite Fastenings

REPORT HOLDER:

MITEK® INC.

EVALUATION SUBJECT:

MITEK® ANGLES, STRAPS, HANGERS AND TIES FOR WOOD FRAMED CONSTRUCTION

1.0 REPORT PURPOSE AND SCOPE

Purpose:

The purpose of this evaluation report supplement is to indicate that MiTek Angles, Straps, Hangers and Ties for Wood Framed Construction, described in ICC-ES evaluation report ESR-3455, have also been evaluated for compliance with the codes noted below.

Applicable code editions:

- 2026 and 2023 *Florida Building Code—Building*
- 2026 and 2023 *Florida Building Code—Residential*

2.0 CONCLUSIONS

The MiTek Angles, Straps, Hangers and Ties for Wood Framed Construction, described in Sections 2.0 through 7.0 of the evaluation report ESR-3455, comply with the *Florida Building Code—Building* and the *Florida Building Code—Residential*. The design requirements must be determined in accordance with the *Florida Building Code—Building* or the *Florida Building Code—Residential*, as applicable. The installation requirements noted in ICC-ES evaluation report ESR-3455 for the 2024 and 2021 *International Building Code®* meet the requirements of the *Florida Building Code—Building* or the *Florida Building Code—Residential*, as applicable, with the following conditions:

- For use within 3,000 feet of a saltwater coastline, fasteners and connectors must comply with Section 1711 and Table 1711.1 of the 2026 *Florida Building Code—Building* or Section R332 and Table R332.1 of the 2026 *Florida Building Code—Residential*, as applicable.
- The MiTek Angles, Straps, Hangers and Ties described in the evaluation report are structural connectors used for connecting wood framing members in accordance with Section 2304.10.3 of the Florida Building Code—Building. The connectors may also be used in structures regulated under the *Florida Building Code—Residential* when an engineered design is submitted to, and approved by, the code official, in accordance with Section R301.1.3 of the Florida Building Code—Residential.
- Connectors and fasteners used in contact with preservative-treated or fire-retardant-treated wood must comply with Section 2304.10.5 of the Florida Building Code—Building or Section R317.3 of the Florida Building Code—Residential, as applicable.

Use of the MiTek Angles, Straps, Hangers and Ties for Wood Framed Construction have also been found to be in compliance with the High-Velocity Hurricane Zone (HVHZ) provisions of the *Florida Building Code—Building*, and the *Florida Building Code—Residential* with the following condition:

a. For connections subject to uplift, the connection must be designed for no less than 700 pounds (3114 N).

For products falling under Florida Rule 61G20-3, verification that the report holder's quality-assurance program is audited by a quality-assurance entity approved by the Florida Building Commission for the type of inspections being conducted is the responsibility of an approved validation entity (or the code official, when the report holder does not possess an approval by the Commission). Florida Rule 61G20-3 is applicable to products and/or systems which comprise the building envelope and structural frame for compliance with the structural requirements of the Florida Building Code.

This supplement expires concurrently with the evaluation report ESR-3455, reissued October 2024 and revised July 2026.

ICC-ES Evaluation Reports are not to be construed as representing aesthetics or any other attributes not specifically addressed, nor are they to be construed as an endorsement of the subject of the report or a recommendation for its use. There is no warranty by ICC Evaluation Service, LLC, express or implied, as to any finding or other matter in this report, or as to any product covered by the report.

Copyright © 2026 ICC Evaluation Service, LLC. All rights reserved.